VOLUSIA
COUNTY SCHOOLS

THE SCHOOL BOARD OF VOLUSIA
COUNTY FLORIDA
200 North Clara Avenue
Deland, Florida 32720

HOLLY HILL SCHOOL
REPLACE SWITCHGEAR
BLDG. 6
VCS Project NO. 2347928

1500 CENTER AVE.
HOLLY HILL, FL 32117

SCHOOL BOARD MEMBERS

Jamie M. Haynes	CHAIRMAN
Anita Burnette	VICE CHAIRMAN
Ruben Colon	MEMBER
Carl G. Persis	MEMBER
Jessie Thompson	MEMBER
Carmen J. Balgobin	SUPERINTENDENT

DESCRIPTION OF WORK

REPLACE EXISTING SWITCHGEAR WITH NEW.

Engineer's Statement of Compliance
To the best of my knowledge, these drawings and the project manual are complete and comply with the Florida Building Code.

BUILDING DATA

A.	SURVEY PARCEL ID	XXX
B.	LEGAL DESCRIPTION	XXX
C.	OCCUPANCY TYPE	Educational
D.	CONSTRUCTION TYPE	Type II, Non-combustible
E.	RISK CATEGORY	IV
F.	AUTOMATIC SPRINKLER	Unsprinklered
G.	BUILDING AREA	XXX
H.	BUILDING HEIGHT	XXX
I.	OCCUPANT LOAD	XXX

LOCATION MAP

NOT TO SCALE

ENGINEERS & CONSULTANTS

ELECTRICAL
MATERN PROFESSIONAL ENGINEERING
130 Candace Drive
Maitland, Fl 32715
407-740 -5020
Adrian Baus
abaus@matern.net
http://matern.net

MATERN
Mechanical • Electrical • Plumbing • Fire Protection
Technology • Commissioning • Energy Engineers
130 Candace Drive
Maitland, FL 32751
ENG. BUS. No. EB-0005096 PHONE (407) 740-5020
CERT. OF AUTH. No. 5096 FAX (407) 740-0365

SHEET NO.	SHEET MAME	SCALE
G001	COVER SHEET	NONE
E001	GENERAL NOTES AND ABBREVIATIONS	NONE
E002	SYMBOL LEGEND	NONE
ED101	ELECTRICAL FLOOR PLAN - DEMOLITION	1/4" = 1'-0"
E101	ELECTRICAL FLOOR PLAN - RENOVATION	1/4" = 1'-0"
E501	DETAILS	NONE
E502	DETAILS	NONE
E600	PARTIAL POWER RISER DIAGRAMS	NONE
E601	SCHEDULES	NONE
E602	SCHEDULES	NONE

CONSTRUCTION DOCUMENTS 12/09/2022

MATERN
Mechanical • Electrical • Plumbing • Fire Protection
Technology • Commissioning • Energy Engineers
130 Candace Drive
Maitland, FL 32751
ENG. BUS. No. EB-0005096 PHONE (407) 740-5020
CERT. OF AUTH. No. 5096 FAX (407) 740-0365
MPE JOB #: 2022-169

REVISIONS

DOCUMENT HISTORY

NO.	DATE	DESCRIPTION
	02/07/23	BID ISSUE

HOLLY HILL SCHOOL
REPLACE SWITCHGEAR BLDG. 6
VCS Project No. 2347928
1500 CENTER AVE.
HOLLY HILL, FL 32117

ARCHENGR OF RECORD
Engineer
Adrian Baus

DESIGNED BY	DRAWN BY
AWB	MM
ISSUE DATE	AE PROJECT NUMBER
12/09/2022	2022-169

SHEET TITLE
COVER SHEET

DRAWING NO.
G001

MATERN PROFESSIONAL ENGINEERING PLOT DATE: 2/9/2023 10:44:48 AM FILENAME:I:\2022...jobs\2022-169_VCS Holly Hill School - Replace Switchgear Bldg. 6 (2347928)\CAD\2022-169_CS_G001.dwg
CREATE DATE: 2/9/2023 10:43:06 AM LAST SAVED:2/9/2023 10:43:06 AM LAST SAVED BY: ABAUS

GENERAL NOTES

1. 120 VOLT BRANCH CIRCUITS, WHERE THE LENGTH OF CIRCUIT CONDUCTORS COMPLETE FROM CIRCUIT BREAKER IN SOURCE PANEL TO ANY DEVICE ON THE CIRCUIT IS 0–100 FEET FROM THE PANEL, ARE TO HAVE #12 MINIMUM BRANCH CIRCUIT WIRING THROUGHOUT CIRCUIT. (CONDUIT SIZE PER SPECIFICATION AND NEC).

2. 120 VOLT BRANCH CIRCUITS, WHERE THE LENGTH OF CIRCUIT CONDUCTORS COMPLETE FROM CIRCUIT BREAKER IN SOURCE PANEL TO ANY DEVICE ON THE CIRCUIT IS 101–175 FEET FROM THE PANEL, ARE TO HAVE #10 MINIMUM BRANCH CIRCUIT WIRING HOMERUN (3/4"C.) FROM PANEL CIRCUIT BREAKER TO FIRST DEVICE AND #12 BRANCH CIRCUIT WIRING THROUGHOUT THE REMAINDER OF THE CIRCUIT. (CONDUIT SIZE PER SPECIFICATION AND NEC). FIRST 75 FEET OF COMBINED HOMERUN AND BRANCH CIRCUIT TO BE MINIMUM #10 WIRE. (3/4"C).

3. 120 VOLT BRANCH CIRCUITS, WHERE THE LENGTH OF CIRCUIT CONDUCTORS COMPLETE FROM CIRCUIT BREAKER IN SOURCE PANEL TO ANY DEVICE ON THE CIRCUIT IS 176–225 FEET FROM THE PANEL, ARE TO HAVE #10 MINIMUM BRANCH CIRCUIT WIRING HOMERUN (3/4"C.) FROM PANEL CIRCUIT BREAKER TO FIRST DEVICE AND #10 BRANCH CIRCUIT WIRING THROUGHOUT THE REMAINDER OF THE CIRCUIT (3/4"C.)

4. 120 VOLT BRANCH CIRCUITS, WHERE THE LENGTH OF CIRCUIT CONDUCTORS COMPLETE FROM CIRCUIT BREAKER IN SOURCE PANEL TO ANY DEVICE ON THE CIRCUIT IS 226 FEET OR MORE FROM THE PANEL, ARE TO HAVE #8 MINIMUM BRANCH CIRCUIT WIRING HOMERUN (1"C.) FROM PANEL CIRCUIT BREAKER TO FIRST DEVICE AND #10 BRANCH CIRCUIT WIRING THROUGHOUT THE REMAINDER OF THE CIRCUIT (3/4"C.). FIRST 125 FEET OF COMBINED HOMERUN AND BRANCH CIRCUIT TO BE MINIMUM #8 WIRE (1"C.)

5. NO MULTI–WIRE BRANCH CIRCUITS ARE TO BE USED. EACH CIRCUIT IS TO HAVE SEPARATE INDIVIDUAL NEUTRAL.

6. VISIT AND CAREFULLY EXAMINE THOSE PORTIONS OF THE BUILDING AND SITE AFFECTED BY THIS WORK BEFORE SUBMITTING PROPOSALS, SO AS TO BECOME FAMILIAR WITH EXISTING CONDITIONS AND DIFFICULTIES THAT WILL AFFECT EXECUTION OF THE WORK. SUBMISSION OF A PROPOSAL WILL BE CONSTRUED AS EVIDENCE THAT SUCH EXAMINATION HAS BEEN MADE AND LATER CLAIMS FOR LABOR, EQUIPMENT OR MATERIALS REQUIRED BECAUSE OF DIFFICULTIES ENCOUNTERED WILL NOT BE RECOGNIZED.

7. READ SPECIFICATIONS.

8. SEE RISER DIAGRAMS AND BUILDING PLANS.

9. ALL EMPTY CONDUITS ARE TO HAVE PULL–STRINGS PROVIDED IN THEM.
A PHENOLIC OR BRASS NAMEPLATE SHALL BE ATTACHED TO EACH END INDICATING THE LOCATION OF BOTH ENDS OF CONDUIT AS FOLLOWS: THIS END = "LOCATION," OTHER END = "LOCATIONS."

10. WHERE CONDUIT ROUTING IS SHOWN, THE CONDUITS ARE SHOWN FOR DIAGRAMMATIC PURPOSES AND ARE NOT NECESSARILY REPRESENTATIVE OF EXACT PLACEMENT. THE ROUTINGS SHOWN ARE PROPOSED CONDUIT ROUTINGS. CONTRACTOR TO COORDINATE ALL ROUTING WITH OTHER TRADES PRIOR TO BID. CONTRACTOR TO FIELD VERIFY EXISTING CONDITIONS AND ROUTING OF CONDUIT PRIOR TO BID. CONTRACTOR IS RESPONSIBLE FOR RELOCATING CONDUIT FROM THE PROPOSED ROUTING SHOWN TO THE ROUTING REQUIRED TO FACILITATE INSTALLATION PER SPECIFICATIONS AND APPLICABLE CODES, COMPLETE WITH ALL COORDINATION AND EXISTING CONDITIONS TAKEN INTO ACCOUNT. CONTRACTOR IS RESPONSIBLE FOR ALL CEILING AND WALL REPAIR/REPLACEMENT AFTER ROUTING OF CONDUIT.

11. SPLICES IN POWER AND LIGHTING OUTLET BOXES SHALL BE KEPT TO A MINIMUM, PULL CONDUCTORS THROUGH TO DEVICES, EQUIPMENT CABINETS/PANELBOARDS. SPLICING IN WIREWAYS IS NOT PERMITTED UNLESS SPECIAL WRITTEN PERMISSION IS GRANTED BY A/E.

12. NO SPLICES SHALL BE MADE IN COMMUNICATIONS OUTLET BOXES OR PULL BOXES (I.E., FIRE ALARM, COMPUTER, TELEPHONE, ETC.) UNLESS SPECIFIC WRITTEN APPROVAL HAS BEEN GIVEN BY ENGINEER. PULL CABLES THROUGH TO EQUIPMENT/TERMINAL CABINETS.

13. NO SPLICES SHALL BE MADE IN UNDERGROUND (OR FLUSH) IN–GRADE PULL BOXES UNLESS ENGINEER HAS GIVEN SPECIFIC ACCEPTANCE.

14. CONTRACTOR SHALL INCLUDE IN HIS BID THE TRANSPORT AND DISPOSAL OR RECYCLING OF ALL WASTE MATERIALS GENERATED BY THIS PROJECT IN ACCORDANCE WITH ALL RULES, REGULATIONS AND GUIDELINES APPLICABLE. CONTRACTOR SHALL COMPLY FULLY WITH FLORIDA STATUTE 403.7186 REGARDING MERCURY CONTAINING DEVICES AND LAMPS. LAMPS, BALLASTS AND OTHER MATERIALS SHALL BE TRANSPORTED AND DISPOSED OF IN ACCORDANCE WITH ALL DEP AND EPA GUIDELINES APPLICABLE AT TIME OF DISPOSAL. CONTRACTOR SHALL PROVIDE OWNER WITH WRITTEN CERTIFICATION OF ACCEPTED DISPOSAL.

15. EXISTING CONDITIONS AND UTILITIES INDICATED ARE TAKEN FROM EXISTING CONSTRUCTION DOCUMENTS, VARIOUS SURVEYS, AND FIELD INVESTIGATIONS. IT IS TO BE UNDERSTOOD THAT UNFORESEEN CONDITIONS PROBABLY EXIST AND NEW WORK MAY NOT BE FIELD LOCATED EXACTLY AS SHOWN ON THE DRAWINGS. COOPERATION WITH OTHER TRADES IN ROUTING AND/OR BURIAL DEPTHS AS DETERMINED DURING CONSTRUCTION AND AS DIRECTED BY THE ARCHITECT/ENGINEER MAY BE NECESSARY AND IT IS INTENDED THAT SUCH DEVIATIONS SHALL BE CONSIDERED A PART OF THIS CONTRACT. IT IS ALSO UNDERSTOOD THAT THE PLANS ARE NOT COMPLETELY TO SCALE. THIS CONTRACTOR IS TO FIELD VERIFY DIMENSIONS OF ALL SITE UTILITIES, ETC., PRIOR TO BID AND INCLUDE ANY DEVIATIONS IN THE CONTRACT.

16. IT SHALL BE THE RESPONSIBILITY OF THE CONTRACTOR TO LOCATE ALL EXISTING UTILITIES WHETHER SHOWN ON PLANS OR NOT AND TO PROTECT THEM FROM DAMAGE. THE CONTRACTOR SHALL BEAR ALL EXPENSE FOR REPAIR OR REPLACEMENT OF UTILITIES OR OTHER PROPERTY DAMAGED BY OPERATIONS IN CONJUNCTION WITH THE COMPLETION OF THIS WORK. THE CONTRACTOR SHALL LOCATE ALL UTILITIES (BOTH KNOWN AND UNKNOWN) IN AREA OF WORK PRIOR TO EXCAVATION WITH THE USE OF ELECTRONIC LOCATOR/TRACER DEVICES AND EQUIPMENT SUITABLE FOR SUCH USE. REFLECT LOCATED UTILITIES ON AS–BUILT DOCUMENTS.

17. REMOVE EXISTING POWER, LIGHTING, SYSTEMS, MATERIAL AND EQUIPMENT WHICH ARE MADE OBSOLETE OR WHICH INTERFERE WITH THE CONSTRUCTION OF THE PROJECT.

18. REINSTALL ANY SUCH POWER, LIGHTING, SYSTEMS, MATERIALS AND EQUIPMENT WHICH ARE REQUIRED TO REMAIN ACTIVE FOR THE FACILITY TO BE FULLY FUNCTIONAL.

19. ALL EXISTING ELECTRICAL IS NOT SHOWN. IT IS THE CONTRACTORS RESPONSIBILITY TO BECOME FAMILIAR WITH ALL EXISTING CONDITIONS PRIOR TO BID.

20. ALL CONDUIT TO BE CONCEALED UNLESS IMPOSSIBLE DUE TO EXISTING CONDITIONS (I.E. EXPOSED CEILINGS, BUILDING EXTERIOR WALL RUNS, IMPOSSIBLE UNDERGROUND RUNS). CONCEAL ALL CONDUITS ABOVE CEILINGS OR IN WALL/COUNTERS.

21. ALL OUTLET BOXES WHERE FIXTURES OR DEVICES ARE REMOVED SHALL BE REMOVED AND CEILING OR WALL SHALL BE PATCHED TO MATCH EXISTING OR NEW FINISH. IF OUTLET BOX MUST REMAIN TO MAINTAIN CONTINUITY OF CIRCUITRY, AN APPROPRIATE ACCESSIBLE BLANK PLATE SHALL BE INSTALLED WITH FINISH TO MATCH EXISTING OR NEW, WHERE APPLICABLE. ALL OUTLET BOXES WHICH MUST BE REMOVED DUE TO REMOVAL OF WALL, AND WHICH MUST REMAIN ACTIVE IN ORDER TO MAINTAIN CIRCUIT CONTINUITY SHALL BE RELOCATED IN CEILING OR FLOOR, SHALL BE ACCESSIBLE, AND SHALL HAVE BLANK COVERPLATE AS DESCRIBED ABOVE.

22. ALL EXISTING BRANCH CIRCUITS AND FEEDERS (REMAINING ACTIVE) WHICH ARE CONNECTED TO EXISTING PANELBOARDS THAT ARE AFFECTED BY THIS CONTRACT, SHALL BE TRACED–OUT AND PROPERLY NOTED AND IDENTIFIED ON NEW PANEL DIRECTORIES.

23. ALL PANELS, CIRCUIT BREAKERS, JUNCTION BOXES, ETC. THAT ARE ASSOCIATED WITH PROJECT SHALL BE PROPERLY IDENTIFIED AS PER SPECIFICATIONS.

24. PROVIDE NEW TYPED PANEL DIRECTORIES FOR ALL EXISTING AND NEW PANELBOARDS FOR PANELBOARDS ASSOCIATED WITH CONTRACT WHETHER SHOWN ON PLANS OR NOT REGARDLESS IF SCHEDULES/CIRCUITRY HAS BEEN CHANGED.

25. PROVIDE NEW PHENOLIC LABELS (PER SPEC'S) ON ALL (2) TWO POLE AND (3) THREE POLE CIRCUIT BREAKERS WITHIN ALL EXISTING AND NEW PANELBOARDS ASSOCIATED WITH CONTRACT WHETHER SHOWN ON PLANS OR NOT REGARDLESS IF SCHEDULES/CIRCUITRY HAS BEEN CHANGED.

26. ALL CONCRETE, WALL PATCHING, CEILING REPAIR, WALL FINISHES, AND OTHER GENERAL WORK REQUIRED FOR INSTALLING ELECTRICAL SYSTEMS SHALL BE REPAIRED TO "LIKE NEW/ORIGINAL CONDITION." (COORDINATE WITH GENERAL CONTRACTOR PRIOR TO BID.)

27. ALL PATCHES OR CEILING PLATES SHALL BE PATCHED OR PAINTED AS DIRECTED BY ENGINEER.

28. PAINT ALL EXPOSED CONDUIT, BOXES, ETC. TO MATCH WALL SURFACE.

29. ALL OPENINGS IN FIRE RATED WALLS AND FLOORS, ETC. MADE BY RENOVATION SHALL BE SEALED AND FIREPROOFED. PROVIDE AND INSTALL FIRESTOPPING ON ALL NEW OR EXISTING CONDUIT AND/OR CABLE THAT PENETRATES ANY FIRE RATED NEW OR EXISTING WALL IN ALL AREAS AFFECTED BY THIS PROJECT. VERIFY LOCATION OF FIRE RATED WALLS PRIOR TO BID. FIRESTOPPING SYSTEM SHALL BE AS REQUIRED BY UL FOR RATING OF WALL AND CONDUIT/CABLE PENETRATION.

30. DASHED ITEMS INDICATE EXISTING TO REMAIN.

31. "R" ADJACENT TO DEVICE INDICATES EXISTING TO BE REMOVED COMPLETE.

32. NEW UNDERGROUND RACEWAYS ARE TO BE HAND DUG. ROUTE UNDER EXISTING WALKWAYS AS REQUIRED BY OWNER.

33. ALL ITEMS REMOVED AND NOT RE–USED SHALL BE IMMEDIATELY TURNED OVER TO OWNER AS THEY ARE MADE AVAILABLE BY RENOVATION. REMOVE ITEMS FROM JOB SITE AND DELIVER TO OWNERS STORAGE LOCATION(S) AS DIRECTED BY PROJECT MANAGER. DISCARD COMPLETE ITEMS WHICH OWNER ELECTS TO REFUSE.

34. WORK TO BE PERFORMED IN STRICT COMPLIANCE WITH ESTABLISHED WORK SCHEDULE BEING SET FORTH BY OWNER/TENANT. COORDINATE ALL WORK. THE CONTRACTOR SHALL FURNISH ADEQUATE FORCES, CONSTRUCTION PLANT, AND EQUIPMENT, AND SHALL WORK SUCH HOURS, INCLUDING NIGHT SHIFTS, OVERTIME OPERATIONS, SUNDAY, AND HOLIDAYS IN ACCORDANCE WITH THE OWNERS OPERATIONAL SCHEDULE. IF THE CONTRACTOR FALLS BEHIND PROGRESS REQUIRED IN THE OPERATIONAL SCHEDULE, THE CONTRACTOR SHALL TAKE SUCH STEPS AS MAY BE NECESSARY TO IMPROVE HIS PROGRESS, AND THE OWNER MAY REQUIRE HIM TO INCREASE THE NUMBER OF SHIFTS AND/OR OVERTIME OPERATIONS, DAY OF WORK AND/OR THE AMOUNT OF CONSTRUCTION PLANT, AT NO ADDITIONAL COST TO THE OWNER UNDER THIS CONTRACT. (IT SHALL BE UNDERSTOOD THAT SEVERAL BID PACKAGES MAY BE CONSTRUCTED BY VARIOUS CONTRACTOR/SUB–CONTRACTORS WITHIN THE SAME WORK SPACE SIMULTANEOUSLY.)

35. COORDINATE WITH OWNER DEMOLITION INCLUDING POWER, REPLACEMENT OF TRANSFORMER. PROVIDE ALL ELECTRICAL AS REQUIRED, WHETHER SHOWN OR NOT, TO PROVIDE TEMPORARY REACTIVATION OF POWER, AND FIRE ALARM TO CAMPUS.

36. USE OF MC CABLE IS NOT ACCEPTABLE.

37. SPRING STEEL CONDUIT STRAPS AND HANGERS (IE CADDY TYPE) SHALL NOT BE UTILIZED. CEILING WIRES AND INDEPENDENT SUPPORT WIRES SHALL NOT BE USED FOR SUPPORT OF CONDUITS OR BOXES.

ELECTRICAL ABBREVIATIONS

A/C – AIR CONDITIONING
A.C. – ALTERNATING CURRENT
ADD # – ADDENDA #
A/E – ARCHITECT/ENGINEER (OR ENGINEER WHEN ARCHITECT NOT APPLICABLE)
AFD – ADJUSTABLE FREQUENCY DRIVE
AFF – ABOVE FINISHED FLOOR
AFG – ABOVE FINISHED GRADE
AHU – AIR HANDLER UNIT
AIC – AMPS INTERRUPTING CAPACITY
AL – ALUMINUM
ALT – ALTERNATE
AMP – AMPERE
ANSI – AMERICAN NATIONAL STANDARDS INSTITUTE
AWG – AMERICAN WIRE GAUGE
@ – AT
B.C. – BARE COPPER
BIDS – BAGGAGE INFORMATION DISPLAY SYSTEM
BLDG – BUILDING
BRKR – BREAKER
BTU – BRITISH THERMAL UNIT
BTUH – BTU PER HOUR
C. – CONDUIT
C.B. – CIRCUIT BREAKER
CD. – CANDELA
CBM – CERTIFIED BALLAST MANUFACTURERS
CFM – CUBIC FEET PER MINUTE
CKT. – CIRCUIT
CKT BRKR – CIRCUIT BREAKER
C/L – CENTER LINE
CLG. – CEILING
COMP. – COMPRESSOR
CONN. – CONNECTION
COND. – CONDENSER
CONT. – CONTINUOUS
C.R.I. – COLOR RENDERING INDEX
C.T. – CURRENT TRANSFORMER
CU. – COPPER
C.U. – COMPRESSOR CONDENSER UNIT
C.W. – COLD WATER
D.B. – DIRECT BURIAL
D.C. – DIRECT CURRENT
DISC. – DISCONNECT
DN. – DOWN
DPST – DOUBLE POLE SINGLE THROW
DWG – DRAWING
E.C. – ELECTRICAL CONTRACTOR (OR GENERAL CONTRACTOR)
ELEV. – ELEVATOR
EMT – ELECTRIC METALLIC TUBING
EQUIP. – EQUIPMENT
EST – ESTIMATE
FAAP – FIRE ALARM ANNUNCIATOR PANEL
FACP – FIRE ALARM CONTROL PANEL
FATC – FIRE ALARM TERMINAL CABINET
FCCP – FIRE ALARM COMMAND CENTER PANEL
FHC – FIRE HOSE CABINET
FIDS – FLIGHT INFORMATION DISPLAY SYSTEM
FLA – FULL LOAD AMPERES
FT. – FEET
FLR – FLOOR
F.C. – FOOTCANDLES
FVNR – FULL VOLTAGE NON–REVERSING
GAL. – GALLON
GALV. – GALVANIZED
GPH – GALLONS PER HOUR
GPM – GALLONS PER MINUTE
GFI – GROUND FAULT INTERRUPTING
GRS – GALVANIZED RIGID STEEL CONDUIT
GND. – GROUND
HTG – HEATERS
HT – HEIGHT
HZ – HERTZ (CYCLES)
HPF – HIGH POWER FACTOR
HPS – HIGH PRESSURE SODIUM
HP. – HORSEPOWER
HR. – HOUR
H.S. – HEAT STRIP
IMC – INTERMEDIATE METALLIC CONDUIT
INCAND. – INCANDESCENT
IN. – INCHES
J.B. – JUNCTION BOX
KVA – KILOVOLT AMPERE
KW – KILOWATTS
KWH – KILOWATT HOUR
K – KELVIN
L.L.D. – LAMP LUMEN DEPRECIATION
LED – LIGHT EMITTING DIODE
LIU – LIGHT INTERFACE UNIT
LT. – LIGHT
LTG. – LIGHTING
LTS. – LIGHTS
L.P.F. – LOW POWER FACTOR
M.C.B. – MAIN CIRCUIT BREAKER
M.L.O. – MAIN LUGS ONLY
MAINT. – MAINTENANCE
MH. – MANHOLE; METAL HALIDE
MFG. – MANUFACTURER
MAX. – MAXIMUM
MCM – THOUSAND CIRCULAR MILS
MPH – MILES PER HOUR
MM – MILLIMETER
MIN. – MINIMUM
MCP – MOTOR CIRCUIT PROTECTOR
MTD – MOUNTED
N. – NEUTRAL
NEC – NATIONAL ELECTRIC CODE
NEMA – NATIONAL ELECTRICAL MANUFACTURERS ASSOCIATION
NFPA – NATIONAL FIRE PROTECTION ASSOCIATION
N.P.T. – NATIONAL PIPE THREAD
NF – NON FUSED
N.C. – NORMALLY CLOSED
N.O. – NORMALLY OPEN
NIC. – NOT IN CONTRACT
NO. – NUMBER
OB – OUTLET BOX
OD – OUTSIDE DIAMETER
O.L. – OVERLOAD
OLS – OVERLOADS
OS&Y – OUTSIDE SCREW AND YOKE (SPRINKLER)
% – PERCENT
/ – PHASE
P. – POLE
PL – COMPACT FLUORESCENT LAMP
P.T. – POTENTIAL TRANSFORMER
PSF – POUNDS PER SQUARE FOOT
PSI – POUNDS PER SQUARE INCH
PB – PULLBOX
PNL – PANEL
PR – PAIR
PRI. – PRIMARY
PVC – POLYVINYL CHLORIDE
RECEPT. – RECEPTACLE
RPM – REVOLUTIONS PER MINUTE
R.S. – RAPID START
SCA – SHORT CIRCUIT AMPS
SEC. – SECONDARY
SHT – SHEET
S/N – SOLID NEUTRAL
SPST – SINGLE POLE SINGLE THROW
SF – SQUARE FOOT
SW. – SWITCH
SWBD – SWITCHBOARD
SYS. – SYSTEM
THHN; – THWN NYLON JACKETED WIRE
TTB – TELEPHONE TERMINAL BOARD
TTC – TELEPHONE TERMINAL CABINET
TV – TELEVISION
TVTC – TELEVISION TERMINAL CABINET
TVEC – TELEVISION EQUIP. CABINET
TYP – TYPICAL
TEMP. – TEMPERATURE
U.L. – UNDERWRITERS' LABORATORIES
VFD – VARIABLE FREQUENCY DRIVE
VHF – VERY HIGH FREQUENCY
VHO – VERY HIGH OUTPUT
V – VOLT
VA – VOLT AMPERES
VOL. – VOLUME
W – WIRE
W.P. – WEATHERPROOF
XFMR – TRANSFORMER
Y – WYE
YD. – YARD
YR. – YEAR
3R – RAINPROOF
4X – STAINLESS STEEL DUSTIGHT, WATERTIGHT

MATERN
Mechanical • Electrical • Plumbing • Fire Protection
Technology • Commissioning • Energy Engineers
130 Candace Drive
Maitland, FL 32751
ENG. BUS. No. EB-0005096 PHONE (407) 740-5020
CERT. OF AUTH. No. 5096 FAX (407) 740-0365

REVISIONS

DOCUMENT HISTORY

NO.	DATE	DESCRIPTION
	02/07/23	BID ISSUE

HOLLY HILL SCHOOL
REPLACE SWITCHGEAR BLDG. 6
VCS Project No. 2347928
1500 CENTER AVE.
HOLLY HILL, FL 32117

ARCH/ENGR OF RECORD
Engineer
Adrian Baus

DESIGNED BY	DRAWN BY
AWB	MM/AWB
ISSUE DATE	AE PROJECT NUMBER
12/09/2022	2022-169

SHEET TITLE
GENERAL NOTES AND ABBREVIATIONS

DRAWING NO.
E001

MATERN PROFESSIONAL ENGINEERING PLOT DATE: 2/9/2023 10:45:00 AM FILENAME:I:\2022_jobs\2022-169_VCS Holly Hill School - Replace Switchgear Bldg. 6 (2347928)\CAD\2022-169_E001.dwg
CREATE DATE: 2/7/2023 3:23:39 PM LAST SAVED:2/7/2023 3:23:39 PM LAST SAVED BY: ABAUS

CREATE DATE: 2/7/2023 3:23:31 PM LAST SAVED:2/7/2023 3:23:31 PM LAST SAVED BY: ABAUS
MATERN PROFESSIONAL ENGINEERING PLOT DATE: 2/9/2023 10:45:06 AM FILENAME:I:\2022_jobs\2022-169_VCS Holly Hill School - Replace Switchgear Bldg. 6 (2347928)\CAD\2022-169_E002.dwg

SYMBOL LEGEND

SYMBOL	DESCRIPTION	DESIGN SELECTION	APPROVED SUBSTITUTION	APPROVED SUBSTITUTION	REMARKS
	WALL OUTLET BOX AND HID, FLUORESCENT OR INCANDESCENT FIXTURE	SEE FIXTURE SCHEDULE			d
	POLE WITH MOUNTING ARM AND CUT-OFF LIGHT FIXTURE. BOXES INDICATE NUMBER OF FIXTURES AND ORIENTATION	SEE FIXTURE SCHEDULE			
$a	WALL OUTLET BOX AND 20 AMP SINGLE POLE SWITCH ("a" INDICATES SWITCH-LEG)	P&S #PS20AC1	HUBBELL #HBL1221	LEVITON #1221-2	d
$2	WALL OUTLET BOX AND 20 AMP DOUBLE POLE SWITCH	P&S #PS20AC2	HUBBELL #HBL1222	LEVITON #1222-2	d
$3	WALL OUTLET BOX AND 20 AMP THREE-WAY SWITCH	P&S #PS20AC3	HUBBELL #HBL1223	LEVITON #1223-2	d
$4	WALL OUTLET BOX AND 20 AMP FOUR-WAY SWITCH	P&S #PS20AC4	HUBBELL #HBL1224	LEVITON #1224-2	d
$K	WALL OUTLET BOX AND 20 AMP SINGLE POLE KEY SWITCH	P&S #PS20AC1-L	HUBBELL #HBL1221L	LEVITON #1221-2L	d
$2K	WALL OUTLET BOX AND 20 AMP DOUBLE POLE KEY SWITCH	P&S #PS20AC2-L	HUBBELL #HBL1222L	LEVITON #1222-2L	d
$3K	WALL OUTLET BOX AND 20 AMP THREE-WAY KEY SWITCH	P&S #PS20AC3-L	HUBBELL #HBL1223L	LEVITON #1223-2L	d
$4K	WALL OUTLET BOX AND 20 AMP FOUR-WAY KEY SWITCH	P&S #PS20AC4-L	HUBBELL #HBL1224L	LEVITON #1224-2L	d
$L	WALL OUTLET BOX AND SECURITY LOCKING KEY SWITCH, 20 AMP, SINGLE POLE, WITH S.S. PLATE, PROVIDE TWO KEYS	P&S #PS20AC1-KL-55-717	DEVICE: HUBBELL HBL1221RKL PLATE: S12RKL		d
$WP	FLUSH WALL OUTLET BOX AND 20 AMP SINGLE POLE SWITCH, WITH DIE CAST WEATHERPROOF COVER	DEVICE: P&S #PS20AC1 PLATE: P&S #CA1-G	DEVICE: HUBBELL #HBL1221 PLATE: P&S #CA1-G	DEVICE: LEVITON #1221-2	a, d
$WPL	FLUSH WALL OUTLET BOX AND 20 AMP SINGLE POLE SWITCH, WITH LOCKING STAINLESS STEEL WEATHERPROOF COVER. MOUNT OUTLET BOX HORIZONTALLY.	DEVICE: P&S #20AC1 PLATE: P&S #WPH-1L	DEVICE: HUBBELL #HBL1221 PLATE: P&S #WPH-1L	DEVICE: LEVITON #1221-2	a, d
$WP	CAST IRON ZINC PLATED SURFACE MTD. OUTLET BOX AND 20 AMP SINGLE POLE SWITCH, WITH COPPER FREE CAST ALUMINUM WEATHERPROOF COVER	DEVICE: P&S #PS20AC1 BOX AND PLATE: APPLETON #FS/FD/FSK-WT2	DEVICE: HUBBELL #HBL1221 BOX AND PLATE: APPLETON #FS/FD/FSK-WT2	DEVICE: LEVITON #1221-2	a, d, e, f, g
	WALL OUTLET BOX AND 20 AMP SINGLE RECEPTACLE	P&S #5361	HUBBELL #HBL5361	LEVITON #5351	d
	WALL OUTLET BOX AND 20 AMP DUPLEX RECEPTACLE	P&S #PS5362	HUBBELL #HBL5352	LEVITON #5362	d
	TWO GANG WALL OUTLET BOX AND TWO 20 AMP DUPLEX RECEPTACLES	(2)-P&S #PS5362	(2)-HUBBELL #HBL-5352	(2)-LEVITON #5362	d
G	WALL OUTLET BOX AND 20 AMP GFI DUPLEX RECEPTACLE	P&S #2095	HUBBELL #GFR5362S	LEVITON #7899	d
WPG	FLUSH WALL OUTLET BOX AND 20 AMP WEATHER RESISTANT GFCI DUPLEX RECEPTACLE WITH CAST ALUMINUM WEATHER PROOF IN USE COVER	P&S #2095TRWR WITH THOMAS & BETTS #CKMUV OR INTERMATIC #WP1010MC	HUBBELL #GFR5362S WITH THOMAS & BETTS #CKMUV OR HUBBELL #WP26M COVER	LEVITON #W7899-TR WITH THOMAS & BETTS #CKMUV OR INTERMATIC #WP1010MC	a, d
WPL	FLUSH WALL OUTLET BOX AND 20 AMP WEATHER RESISTANT GFCI DUPLEX RECEPTACLE WITH LOCKING STAINLESS STEEL WEATHER PROOF IN USE COVER. PROVIDE LOCK WITH COVER. ALL LOCKS SHALL BE SET TO THE SAME KEY	P&S #2095TRWR WITH THOMAS & BETTS #CKMUV OR INTERMATIC #WP1010MC	HUBBELL #GFR5362S WITH THOMAS & BETTS #CKMUV OR HUBBELL #WP26M COVER	LEVITION #W7899-TR WITH THOMAS & BETTS #CKMUV OR INTERMATIC #WP1010MC	a, d
WPG	CAST IRON PLATED SURFACE MTD. OUTLET BOX AND 20 AMP WEATHER RESISTANT GFCI DUPLEX RECEPTACLE WITH CAST ALUMINUM WEATHERPROOF IN USE COVER	P&S #2095TRWR WITH APPLETON #FS-ID AND THOMAS & BETTS #CKMUV OR INTERMATIC #WP1010MC	HUBBELL #GFR5362S APPLETON #FS-ID AND HUBBELL #WP26M COVER	LEVITION #W7899-TR APPLETON #FS-ID AND THOMAS & BETTS #CKMUV OR INTERMATIC #WP1010MC	a, c, d, e f, g
	WALL OUTLET BOX AND SPECIAL PURPOSE RECEPTACLE AS NOTED ON PLANS	P&S	HUBBELL	LEVITON	d
	FLUSH WALL JUNCTION BOX AND BLANK PLATE	STEEL CITY	RACO		d
	JUNCTION BOX AND BLANK PLATE ABOVE CEILING	STEEL CITY	RACO		b,d
	SURFACE JUNCTION BOX AND BLANK PLATE, WALL MTD. OR MTD. TO CEILING/STRUCTURE AS INDICATED	STEEL CITY	RACO		b, d, g, h
WP	SURFACE MTD. WEATHERPROOF JUNCTION BOX AND COVER, AS NOTED ON PLANS	HOFFMAN			d, g, h
WP	CAST IRON ZINC PLATED SURFACE MTD. OUTLET BOX AND WEATHERPROOF BLANK PLATE	APPLETON #FS-ID WITH #DS-100G COVER			a, d, e, f, g, h
FG	FLUSH GRADE PULLBOX OR MANHOLE AS NOTED.	BROOKS	A.C. MILLER	HUGHES	d, j
	PUSHBUTTON, AS NOTED, MOUNTED AT 48" TO TOP				d
S	FLUSH SHUNT-TRIP BUTTON, LABEL "EMERGENCY MAIN DISCONNECT", MOUNTED AT 48" TO TOP	SQUARE "D" #K-15	ASCO #124200		d

SYMBOL LEGEND (CONTINUED)

SYMBOL	DESCRIPTION	DESIGN SELECTION	APPROVED SUBSTITUTION	APPROVED SUBSTITUTION	REMARKS
	MOTOR CONNECTION, AS NOTED				i
R	RELAY, AS NOTED				
C	CONTROL AND/OR POWER CONNECTION ON EQUIPMENT				i
	TIME CLOCK, 2-POLE, RESERVE SPRING, 24 HR. WITH CONTACTS AND COIL VOLTAGE AS REQUIRED FOR CIRCUITS (UNLESS OTHERWISE NOTED)	TORK (SEE DETAIL)	PARAGON (SEE DETAIL)	INTERMATIC (SEE DETAIL)	i
	PHOTO CELL	TORK (SEE DETAIL)	PARAGON (SEE DETAIL)	INTERMATIC (SEE DETAIL)	
D	METER, AS NOTED				
	HEATER/ELECTRICAL RESISTANCE, AS NOTED				
	BUSBAR				
	MAGNETIC MOTOR STARTER, MOTOR CONTROLLER OR CONTACTOR, AS NOTED	SQUARE "D"	G.E. / EATON	SIEMENS	g, i
	DISCONNECT SWITCH, SIZE AS NOTED	SQUARE "D"	G.E. / EATON	SIEMENS	g, i
	STARTER/DISCONNECT SWITCH, SIZE AS NOTED	SQUARE "D"	G.E. / EATON	SIEMENS	g, i
	120/208V BRANCH CIRCUIT PANELBOARD SURFACE MOUNTED	SQUARE "D"	G.E. / EATON	SIEMENS	i
	120/208V BRANCH CIRCUIT PANELBOARD FLUSH MOUNTED	SQUARE "D"	G.E. / EATON	SIEMENS	i
	TRANSFORMER	SQUARE "D"	G.E. / EATON	SIEMENS	i
	SYSTEMS PANEL - SURFACE MOUNTED	SEE SYSTEMS LEGEND/SPECS			i, j
	SYSTEMS PANEL - FLUSH MOUNTED	SEE SYSTEMS LEGEND/SPECS			i, j
	SYSTEMS TERMINAL BOARD AS NOTED	SEE SYSTEMS LEGEND/SPECS			
	BRANCH CIRCUIT CONDUIT CONCEALED ABOVE CEILING OR IN WALL. SLASH MARKS INDICATE NUMBER OF CONDUCTORS (GROUND WIRE NOT SHOWN). TWO CONDUCTORS PLUS GROUND REQUIRED (UNLESS OTHERWISE NOTED OR MARKED)				
	BRANCH CIRCUIT CONDUIT CONCEALED BELOW SLAB OR UNDERGROUND				
	BRANCH CIRCUIT CONDUIT EXPOSED				
	HOME RUN WIRING. ONE CIRCUIT PER ARROW HEAD				
	CONDUIT CAPPED OFF				
	CONDUIT CONTINUED				
	CONDUIT RUN UP				
	CONDUIT RUN DOWN				
	CONDUIT SEAL-OFF FITTING	CROUSE HINDS	APPLETON		e
G	GROUND WIRE, CONCEALED				
	GROUND OR GROUND ROD AS NOTED				

NOTES:

1) ALL DEVICES TO BE GREY WITH SMOOTH METAL #302 S.S. PLATES UNLESS OTHERWISE NOTED.
2) DASHED ITEM DENOTES "EXISTING".
3) "R" BY DEVICE DENOTES EXISTING TO BE REMOVED COMPLETELY.
4) "H" BY DEVICE DENOTES DEVICE TO BE MOUNTED HORIZONTALLY.
5) MOUNT SWITCHES AT 48" AFF TO TOP.
6) SEE SPECIFICATIONS FOR ADDITIONAL REQUIREMENTS.
7) ALL ITEMS NOTED ON THE LEGENDS DO NOT NECESSARILY APPEAR ON PLANS.

REMARKS:

a) U.L. LISTED FOR WET LOCATION IN CLOSED POSITION.
b) SUPPORT OUTLET BOX FROM STRUCTURE WITH (1) 3/8" ALL THREADS MINIMUM. BOXES LARGER THAN 25 SQUARE INCHES SHALL BE SUPPORTED WITH (2) 3/8" ALL THREADS MINIMUM.
c) U.L. LISTED FOR WET LOCATION IN OPEN POSITION WITH ATTACHMENT PLUG INSERTED.
d) JUNCTION/OUTLET BOX SHALL BE SIZED AS REQUIRED FOR CONDUCTOR/DEVICE FILL PER N.E.C.
e) THREADED CONDUIT HUBS SHALL BE SIZED AND CONFIGURED AS REQUIRED FOR APPLICATION.
f) IF WITHIN 30 MILES OF THE COAST LINE, COPPER FREE CAST ALUMINUM OUTLET BOXES SHALL BE USED FOR EXTERIOR APPLICATIONS.
g) PROVIDE KINDORF MTG. RACK FOR FREE STANDING APPLICATIONS. KINDORF SHALL BE PVC COATED FOR EXTERIOR APPLICATIONS. ALL CUT ENDS ARE TO BE SEALED.
h) WHEN SURFACE JUNCTION BOX SYMBOL IS COMBINED WITH DEVICE SYMBOL, PROVIDE APPROPRIATE SURFACE PLATE FOR OUTLET APPLICATION.
i) MAINTAIN WORKING CLEARANCES IN STRICT ACCORDANCE WITH N.E.C. COORDINATE EXACT LOCATION OF EQUIPMENT WITH ALL DISCIPLINES (I.E. STRUCTURAL, HVAC, PLUMBING, FIRE PROTECTION, KITCHEN, MILLWORK, ETC.) PRIOR TO ROUGH-IN TO MAINTAIN CLEARANCES.
j) OUTLET BOX SHALL BE SIZED PER SYSTEM INSTALLER REQUIREMENTS.

MATERN
Mechanical • Electrical • Plumbing • Fire Protection
Technology • Commissioning • Energy Engineers
130 Candace Drive
Maitland, FL 32751
ENG. BUS. No. EB-0005096 PHONE (407) 740-5020
CERT. OF AUTH. No. 5096 FAX (407) 740-0365

REVISIONS

NO.	DATE	DESCRIPTION
	02/07/23	BID ISSUE

HOLLY HILL SCHOOL
REPLACE SWITCHGEAR BLDG. 6
VCS Project No. 2347928
1500 CENTER AVE.
HOLLY HILL, FL 32117

ARCH/ENGR OF RECORD
Engineer
Adrian Baus

DESIGNED BY	DRAWN BY
AWB	MM/AWB
ISSUE DATE 12/09/2022	AE PROJECT NUMBER 2022-169

SHEET TITLE
SYMBOL LEGEND

DRAWING NO.
E002

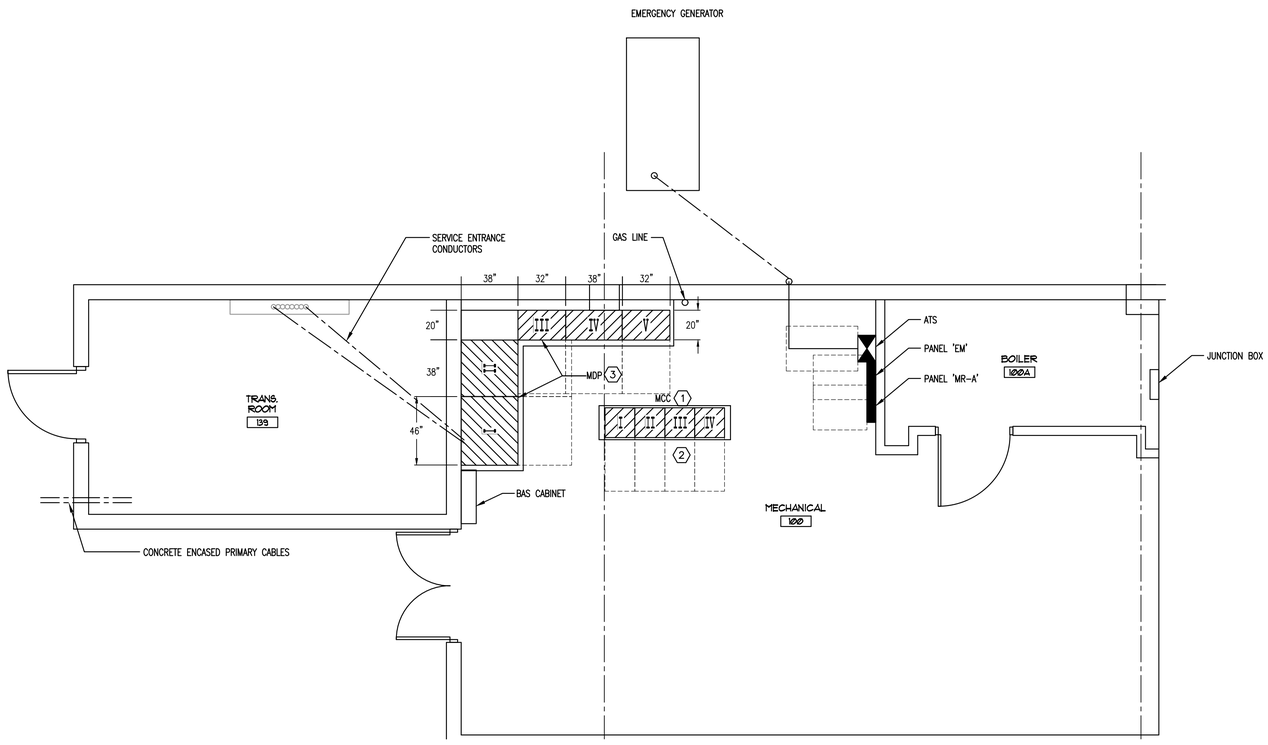

ELECTRICAL FLOOR PLAN - DEMOLITION

1/4" =1'-0"

0 2' 4' 8'

GENERAL NOTES

1) REFER TO GENERAL NOTES.

2) REFER TO SPECIFICATIONS.

3) WHERE CONDUIT ROUTING IS SHOWN, THE CONDUITS ARE SHOWN FOR DIAGRAMMATIC PURPOSES AND ARE NOT NECESSARILY REPRESENTATIVE OF EXACT PLACEMENT.

4) REFER TO MECHANICAL EQUIPMENT FEEDER SCHEDULES FOR ELECTRICAL REQUIREMENTS FOR MECHANICAL EQUIPMENT.

3) REWORK/RELOCATE EXISTING ELECTRICAL AS REQUIRED TO FACILITATE CONSTRUCTION.

4) CONTRACTOR SHALL MAINTAIN CONTINUITY TO EXISTING DEVICES REMAINING.

5) ALL EXISTING ELECTRICAL IS NOT SHOWN.

6) VERIFY EXISTING PHASE ROTATIONS AT ALL EXISTING EQUIPMENT PRIOR TO DISCONNECTING ANY LOADS. VERIFY PHASE ROTATION HAS NOT CHANGED PRIOR TO REENERGIZING ANY LOADS.

7) ALL CONNECTIONS TO EXTERIOR ENCLOSURES MADE AT OTHER THAN BOTTOM OF ENCLOSURE SHALL BE MADE WITH WEATHERPROOF MYERS HUBS.

5) MAINTAIN OPERATION OF ELECTRICAL SYSTEM DURING BUILDING OPERATIONAL HOURS. ALL WORK SHALL BE DONE AT NIGHT AND ON WEEKENDS.

6) ALL POWER OUTAGES SHALL BE SCHEDULED WITH AND APPROVED BY VCS PROJECT MANAGER 1 WEEK IN ADVANCE. FOR ANY OUTAGE LASTING MORE THAN 2 HOURS PROVIDE TEMPORARY POWER TO ANY AND ALL REFRIGERATORS AND FREEZERS IMPACTED BY OUTAGE.

7) TRACE OUT CIRCUITS AND PROVIDE UPDATED TYPED PANEL SCHEDULE FOR ANY PANEL ASSOCIATED WITH PROJECT.

8) PROVIDE NEW ENGRAVED NAMEPLATES NEW AND EXISTING EQUIPMENT CLEARLY IDENTIFYING LOAD SERVED AND THE SOURCE.

KEY NOTES

1 MCC TO BE ELIMINATED. FIELD VERIFY ACTIVE CIRCUTIS AND REFEED THEM FROM NEW MDP.

2 REMOVE MCC COMPLETE INCLUDING HOUSEKEEPING PAD.

3 MDP TO BE REPLACED WITH NEW MDP.

MATERN
Mechanical • Electrical • Plumbing • Fire Protection
Technology • Commissioning • Energy Engineers
130 Candace Drive
Maitland, FL 32751
ENG. BUS. No. EB-0005096 PHONE (407) 740-5020
CERT. OF AUTH. No. 5096 FAX (407) 740-0365

REVISIONS

DOCUMENT HISTORY

NO.	DATE	DESCRIPTION
	02/07/23	BID ISSUE

HOLLY HILL SCHOOL
REPLACE SWITCHGEAR BLDG. 6
VCS Project No. 2347928
1500 CENTER AVE.
HOLLY HILL, FL 32117

ARCH/ENGR OF RECORD
Engineer
Adrian Baus

DESIGNED BY	DRAWN BY
AWB	MM/AWB
ISSUE DATE 12/09/2022	AE PROJECT NUMBER 2022-169

SHEET TITLE
ELECTRICAL FLOOR PLAN - DEMOLITION

DRAWING NO.
ED101

MATERN PROFESSIONAL ENGINEERING PLOT DATE: 2/9/2023 10:44:54 AM FILENAME:I:\2022__jobs\2022-169_VCS Holly Hill School - Replace Switchgear Bldg. 6 (2347928)\CAD\2022-169_ED101.dwg
CREATE DATE: 1/10/2023 1:13:35 PM LAST SAVED:2/7/2023 3:59:12 PM LAST SAVED BY: ABAUS

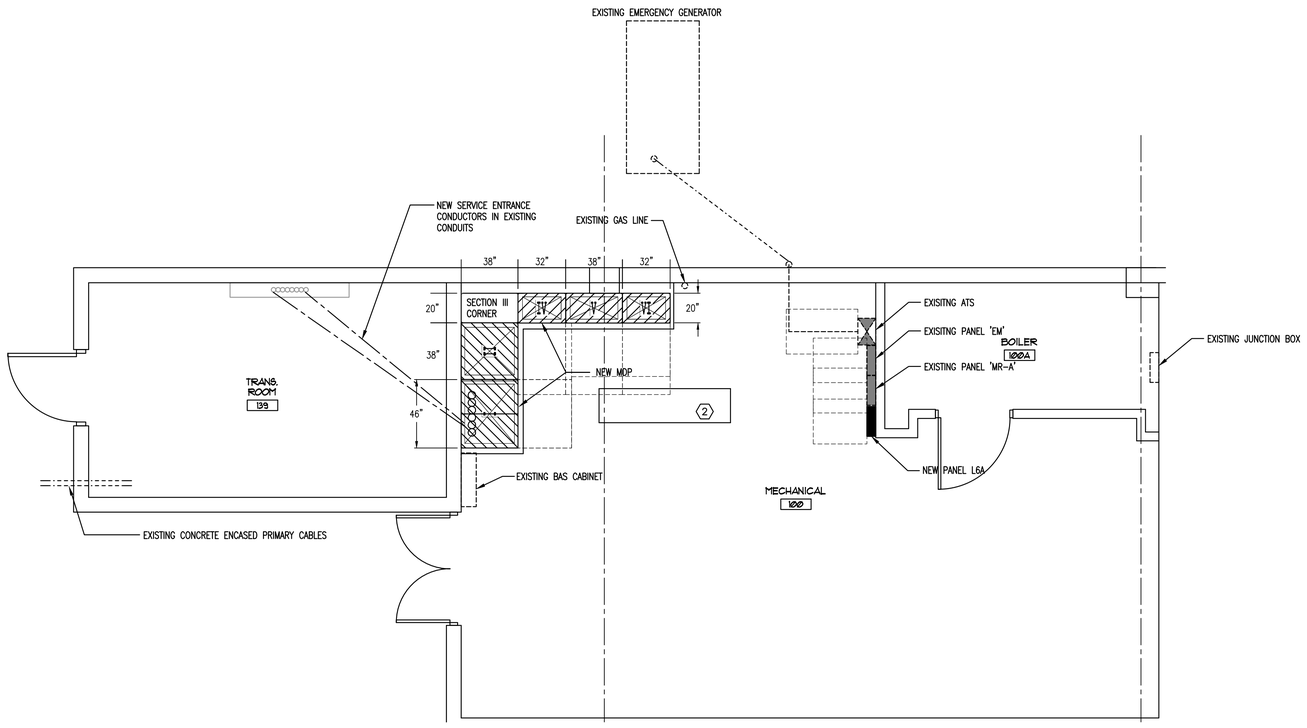

ELECTRICAL FLOOR PLAN - RENOVATION

1/4" =1'-0"

0 2' 4' 8'

GENERAL NOTES

1) REFER TO GENERAL NOTES.

2) REFER TO SPECIFICATIONS.

3) WHERE CONDUIT ROUTING IS SHOWN, THE CONDUITS ARE SHOWN FOR DIAGRAMMATIC PURPOSES AND ARE NOT NECESSARILY REPRESENTATIVE OF EXACT PLACEMENT.

4) REFER TO MECHANICAL EQUIPMENT FEEDER SCHEDULES FOR ELECTRICAL REQUIREMENTS FOR MECHANICAL EQUIPMENT.

3) REWORK/RELOCATE EXISTING ELECTRICAL AS REQUIRED TO FACILITATE CONSTRUCTION.

4) CONTRACTOR SHALL MAINTAIN CONTINUITY TO EXISTING DEVICES REMAINING.

5) ALL EXISTING ELECTRICAL IS NOT SHOWN.

6) VERIFY EXISTING PHASE ROTATIONS AT ALL EXISTING EQUIPMENT PRIOR TO DISCONNECTING ANY LOADS. VERIFY PHASE ROTATION HAS NOT CHANGED PRIOR TO REENERGIZING ANY LOADS.

7) ALL CONNECTIONS TO EXTERIOR ENCLOSURES MADE AT OTHER THAN BOTTOM OF ENCLOSURE SHALL BE MADE WITH WEATHERPROOF MYERS HUBS.

5) MAINTAIN OPERATION OF ELECTRICAL SYSTEM DURING BUILDING OPERATIONAL HOURS. ALL WORK SHALL BE DONE AT NIGHT AND ON WEEKENDS.

6) ALL POWER OUTAGES SHALL BE SCHEDULED WITH AND APPROVED BY VCS PROJECT MANAGER 1 WEEK IN ADVANCE. FOR ANY OUTAGE LASTING MORE THAN 2 HOURS PROVIDE TEMPORARY POWER TO ANY AND ALL REFRIGERATORS AND FREEZERS IMPACTED BY OUTAGE.

7) TRACE OUT CIRCUITS AND PROVIDE UPDATED TYPED PANEL SCHEDULE FOR ANY PANEL ASSOCIATED WITH PROJECT.

8) PROVIDE NEW ENGRAVED NAMEPLATES NEW AND EXISTING EQUIPMENT CLEARLY IDENTIFYING LOAD SERVED AND THE SOURCE.

KEY NOTES

1) REFEED LOAD THAT WAS PREVIOUSLY FED FROM MCC FROM MDP. FIELD VERIFY BREAKER REQUIREMENTS.

2) REPLACE FLOOR WHERE MCC WAS LOCATED AND PROVIDE NEW EPOXY FLOOR FINISH TO MATCH EXISTING.

MATERN
Mechanical • Electrical • Plumbing • Fire Protection
Technology • Commissioning • Energy Engineers
130 Candace Drive
Maitland, FL 32751
ENG. BUS. No. EB-0005096 PHONE (407) 740-5020
CERT. OF AUTH. No. 5096 FAX (407) 740-0365

REVISIONS

DOCUMENT HISTORY

NO.	DATE	DESCRIPTION
	02/07/23	BID ISSUE

HOLLY HILL SCHOOL
REPLACE SWITCHGEAR BLDG. 6
VCS Project No. 2347928
1500 CENTER AVE.
HOLLY HILL, FL 32117

ARCH/ENGR OF RECORD
Engineer
Adrian Baus

DESIGNED BY	DRAWN BY
AWB	MM/AWB
ISSUE DATE 12/09/2022	AE PROJECT NUMBER 2022-169

SHEET TITLE
ELECTRICAL FLOOR PLAN - RENOVATION

DRAWING NO.
E101

MATERN PROFESSIONAL ENGINEERING PLOT DATE: 2/9/2023 10:45:13 AM FILENAME:I:\2022__jobs\2022-169_VCS Holly Hill School - Replace Switchgear Bldg. 6 (2347928)\CAD\2022-169_E101.dwg
CREATE DATE: 1/9/2023 6:40:54 PM LAST SAVED:2/7/2023 3:59:35 PM LAST SAVED BY: ABAUS

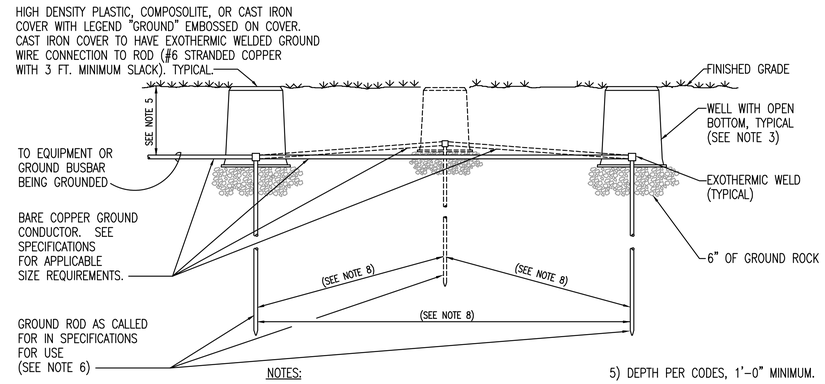

WELL: (SEE NOTE 3)

INSIDE DIMENSIONS: 12 INCHES (MINIMUM)

HEIGHT: 18 INCHES (MINIMUM).

MATERIAL: STRUCTURAL PLASTIC, CONCRETE, OR COMPOSOLITE.

MANUF.: QUAZITE OR BROOKS PRODUCTS.

NOTES:

1) SEE SPECIFICATIONS, SECTION.
2) NOT FOR USE IN PAVED, ETC. LOCATIONS.
3) INCREASE DEPTH, DIAMETER, SIZE, ETC. IF REQUIRED DUE TO INSTALLATION AND ACCESS REQUIREMENTS.
4) CONCRETE COVERS ARE NOT ACCEPTABLE.
5) DEPTH PER CODES, 1'-0" MINIMUM.
6) IF THREE RODS IN A DELTA CONFIGURATION DOES NOT PROVIDE SPECIFIED RESISTANCE, CHANGE ROD LENGTHS FROM MINIMUM SPECIFIED TO 40 OR MORE FEET AS REQUIRED TO PROVIDE SPECIFIED RESISTANCE.
7) MEASUREMENT OF RESISTANCE VALUES TO PROVE COMPLIANCE WITH SPECIFIED RESISTANCE SHALL BE WITH GROUND RODS CONNECTED IN DELTA CONFIGURATION BUT DISCONNECTED FROM EQUIPMENT OR BUSBAR BEING GROUNDED.
8) DIMENSION BETWEEN RODS SHALL BE EQUAL TO OR MORE THAN LENGTH OF ROD INSTALLED.

GROUND WELL DETAIL (MAIN SERVICE) FOR GRASSY UNPAVED NON-TRAFFIC AREAS

N.T.S. GNDWEL3

REV: 8/16/06

CHILLER CH-1
HEAT TAPE

20 AMP 120V 1PH 2W
FED FROM
1L1-73 LOCATED IN
BUILDING 1 ROOM 01-142

BLACK LAMACOID WITH WHITE CORE

GENERAL NOTES:

1. EQUIPMENT NAMEPLATES SHALL BE PROVIDED FOR ALL PANELS, SWITCHES AND LOADS.
2. NAMEPLATES SHALL COMPLY WITH NEC REQUIREMENTS AND CLEARLY IDENTIFY THE LOAD SERVED, THE SOURCE AND THE LOCATION OF THE SOURCE.
3. NAMEPLATES SHALL BE COLOR CODED PER SPECIFICATIONS AND EXISTING BUILDING CONVENTIONS.

TYPICAL NAMEPLATE

N.T.S

SERVICE CONSISTS OF TWO (2) SERVICES:

- ONE (1) TO MDP LOCATED MAIN ELEC. RM. (208 VOLT FROM FPL VAULT)
- ONE (1) TO MSB-1 LOCATED IN SERVICE DRIVE (480 VOLT FROM FPL PAD MOUNT)

THIS CAMPUS HAS AN EMERGENCY BACK UP GENERATOR LOCATED IN CHILLER YARD

ENGRAVED LAMINATED SIGN

PROVIDE SIGNAGE AT EACH SERVICE AND AT EACH GENERATOR PER NEC REQUIREMENTS.

SERVICE SIGN DETAIL "SSD1"

N.T.S. SSD1 HOLLY HILL

MATERN
Mechanical • Electrical • Plumbing • Fire Protection
Technology • Commissioning • Energy Engineers
130 Candace Drive
Maitland, FL 32751
ENG. BUS. No. EB-0005096 PHONE (407) 740-5020
CERT. OF AUTH. No. 5096 FAX (407) 740-0365

REVISIONS

DOCUMENT HISTORY

NO.	DATE	DESCRIPTION
	02/07/23	BID ISSUE

HOLLY HILL SCHOOL
REPLACE SWITCHGEAR BLDG. 6
VCS Project No. 2347928
1500 CENTER AVE.
HOLLY HILL, FL 32117

ARCH/ENGR OF RECORD
Engineer
Adrian Baus

DESIGNED BY	DRAWN BY
AWB	MM/AWB
ISSUE DATE 12/09/2022	AE PROJECT NUMBER 2022-169

SHEET TITLE
DETAILS

DRAWING NO.
E501

MATERN PROFESSIONAL ENGINEERING PLOT DATE: 2/9/2023 10:45:19 AM FILENAME:I:\2022__jobs\2022-169_VCS Holly Hill School - Replace Switchgear Bldg. 6 (2347928)\CAD\2022-169_E501.dwg
CREATE DATE: 2/7/2023 3:22:59 PM LAST SAVED:2/7/2023 3:22:59 PM LAST SAVED BY: ABAUS

SYSTEM NO C-AJ-1027

F RATING--3 HR
T RATING--0 HR

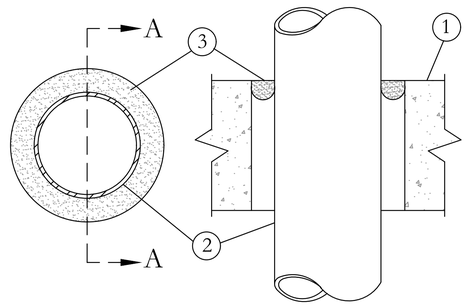

SECTION A–A

1. Floor or Wall Assembly – Min 4–1/2 in. thick lightweight or normal weight (100–150 pcf) concrete. Wall may also be constructed of any UL Classified Concrete Blocks*. Max diam of through opening is 12–1/4 in. See Concrete Blocks (CAZT) category in Fire Resistance Directory for names of manufacturers.
2. Through Penetrants – One metallic pipe, conduit or tubing to be installed either concentrically or eccentrically within the firestop system. Min annular space between pipe, conduit or tubing and edge of opening is 0 in. (point contact). Max annular space is dependent on pipe, conduit or tubing type and size as well as the F Rating of the system, as shown in the table below. Pipe, conduit or tubing to be rigidly supported on both sides of wall assembly. The following types and sizes of metallic pipes, conduits or tubing may be used:
A. Steel Pipe – Nom 10 in. diam (or smaller) Schedule 10 (or heavier) steel pipe.
B. Conduit – Nom 6 in. diam (or smaller) rigid steel conduit.
C. Conduit – Nom 4 in. diam (or smaller) steel electrical metallic tubing or steel conduit.
D. Copper – Tubing Nom 3 in. diam (or smaller) Type L (or heavier) copper tubing.
E. Copper – Pipe Nom 3 in. diam (or smaller) Regular (or heavier) copper pipe.
F. Iron Pipe – Nom 10 in. diam (or smaller) cast or ductile iron pipe.

Pipe Conduit or Tubing Type	Max Nom Pipe Conduit or Tubing Diam In.	F Rating Hr	Max Annular Space In.
2–1/2	1/2–12	3	3/4
2–1/2	1/2–12	3	3/4
4–1/2	1/2–6	3	1–1/2
4–1/2	1/2–12	3	3/4
4–1/2	1/2–20	2	7/8

3. Fill,Void or Cavity Materials* – Putty – Moldable putty material kneaded by hand and applied to fill annular space to a min depth of 1 in., flush with top surface of floor. In wall assemblies, required putty thickness to be installed symmetrically on both sides of wall.
MINNESOTA MINING & MFG CO – MPS–2+
*Bearing the UL Classification Marking

PENETRATION FIRESTOP FOR 10" MAX. DIA. METAL PIPE/CONDUIT THROUGH A CONCRETE WALL OR FLOOR

N.T.S. UL SYSTEM #202 (1 OR 2 HOUR RATING)

System No.W-L-1003
September 03, 2004
(Formerly System No. 147)
F Ratings - 1 and 2 Hr (See Item 1)
T Rating - 0 Hr

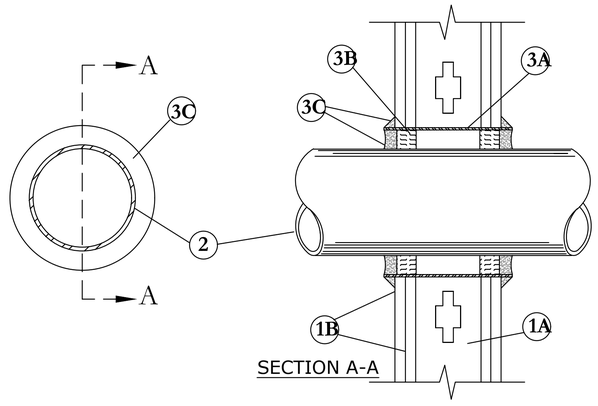

SECTION A-A

1. Wall Assembly – The 1 or 2 hr fire–rated gypsum wallboard/stud wall assembly shall be constructed of the materials and in the manner described in the individual U300 or U400 Series Wall or Partition Design in the UL Fire Resistance Directory and shall include the following construction features:

A. Studs – Wall framing may consist of either wood studs or steel channel studs. Wood studs to consist of nom 2 by 4 in. lumber spaced 16 in. OC with nom 2 by 4 in. lumber end plates and cross braces. Steel studs to be min 3–1/2 in. wide by 1–3/8 in. deep channels spaced max 24 in. OC.
B. Gypsum Board* – Nom 5/8 in. thick, 4 ft. wide with square or tapered edges. The gypsum wallboard type, thickness, number of layers, fastener type and sheet orientation shall be as specified in the individual U300 or U400 Series Design in the UL Fire Resistance Directory. Max diam of opening is 15 in.
The hourly F Rating of the firestop system is equal to the hourly fire rating of the wall assembly in which it is installed.

2. Through Penetrant – One metallic pipe, conduit or tubing to be installed either concentrically or eccentrically within the firestop system. The space between pipes, conduits or tubing and the steel sleeve (Item 3A) shall be min of 0 in. (point contact) to max 2–3/8 in. Pipe, conduit or tubing to be rigidly supported on both sides of wall assembly. The following types and sizes of metallic pipes, conduits or tubing may be used:

A. Steel Pipe – Nom 12 in. diam (or smaller) Schedule 10 (or heavier) steel pipe.
B. Iron Pipe – Nom 12 in. diam (or smaller) service weight (or heavier) cast iron soil pipe, nom 12 in. diam (or smaller) or Class 50 (or heavier) ductile iron pressure pipe.
C. Conduit – Nom 6 in. diam (or smaller) steel conduit or nom 4 in. diam (or smaller) steel electrical metallic tubing.
D. Copper Tubing – Nom 6 in. diam (or smaller) Type L (or heavier) copper tubing.
E. Copper Pipe – Nom 6 in. diam (or smaller) Regular (or heavier) copper pipe.

3. Firestop System – Installed symmetrically on both sides of wall assembly. The details of the firestop system shall be as follows.

A. Steel Sleeve – Cylindrical sleeve fabricated from min 0.019 in. thick (No. 28 gauge) galv sheet steel and having a min 2 in. lap along the longitudinal seam. Length of steel sleeve to be equal to thickness of wall plus 1 to 4 in. such that, when installed, the ends of the sleeve will project approximately 1/2 to 2 in. beyond the surface of the wall on both sides of the wall assembly. Sleeve installed by coiling the sheet steel to a diam smaller than the through opening, inserting the coil through the openings and releasing the coil to let it uncoil against the circular cutouts in the gypsum wallboard layers.
B. Packing Material – Min 1 in. thickness of mineral wool batt insulation firmly packed into steel sleeve on both sides of the wall assembly as permanent forms. Packing material to be recessed min 1/2 in. from end of steel sleeve (flush with or recessed into gypsum wallboard surface) on both sides of wall assembly.
B1. Packing Material – (Not shown) – As an alternate to Item B, nom 1 in. thick polyethylene backer rod may be used. The backer rod is to be recessed within the steel sleeve a min of 1 in. from each surface of wall.
C. Fill,Void or Cavity Materials* – Caulk or Sealant – When mineral wool batt insulation is used, applied to fill the steel sleeve to a min depth of 1/2 in. on both sides of wall assembly. When backer rod is used, a min thickness of 1 in. of CP–25WB+ caulk is required flush with surface of wall. A nom 1/4 in. diam continuous bead of caulk or sealant shall be applied around the circumference of the steel sleeve at its egress from the gypsum wallboard layers on both sides of the wall assembly.

3M COMPANY – CP 25WB+ caulk or FB–3000 WT sealant.

*Bearing the UL Classification Marking

PENETRATION FIRESTOP FOR 12" MAX. DIA. METAL PIPE/CONDUIT THROUGH GYPSUM WALLBOARD ASSEMBLY

N.T.S. UL SYSTEM #147A (1 OR 2 HOUR RATING) FIREST5

NOTES FOR FIRE STOPPING DETAILS (NEC & UL)

1) FIRE STOPPING DETAILS ARE SHOWN FOR GENERAL INTENT. PROVIDE FIRE STOPPING ASSEMBLY SUITABLE FOR THE APPLICATION IN COMPLIANCE WITH FLORIDA BUILDING CODE AND U.L.

2) DETAILS ARE BASED ON 3M PRODUCTS AND THEIR RECOMMENDED USAGE/ DETAILS. SUBSTITUTED PRODUCTS SHALL BE SUBMITTED AS OUTLINED IN SPECIFICATIONS. U.L. FIRE STOPPING ASSEMBLY DETAILS SHALL BE INCLUDED WITH PRODUCT DATA FOR REVIEW PRIOR TO INSTALLATION.

MATERN
Mechanical • Electrical • Plumbing • Fire Protection
Technology • Commissioning • Energy Engineers
130 Candace Drive
Maitland, FL 32751
ENG. BUS. No. EB-0005096 PHONE (407) 740-5020
CERT. OF AUTH. No. 5096 FAX (407) 740-0365

REVISIONS

NO.	DATE	DESCRIPTION
	02/07/23	BID ISSUE

HOLLY HILL SCHOOL
REPLACE SWITCHGEAR BLDG. 6
VCS Project No. 2347928
1500 CENTER AVE.
HOLLY HILL, FL 32117

ARCH/ENGR OF RECORD
Engineer
Adrian Baus

DESIGNED BY	DRAWN BY
AWB	MM/AWB
ISSUE DATE 12/09/2022	AE PROJECT NUMBER 2022-169

SHEET TITLE
DETAILS

DRAWING NO.
E502

CREATE DATE: 10/4/2022 2:01:00 PM LAST SAVED:2/7/2023 2:44:33 PM LAST SAVED BY: ABAUS
MATERN PROFESSIONAL ENGINEERING PLOT DATE: 2/9/2023 10:45:25 AM FILENAME:I:\2022_jobs\2022-169_VCS Holly Hill School - Replace Switchgear Bldg. 6 (2347928)\CAD\2022-169_E502.dwg

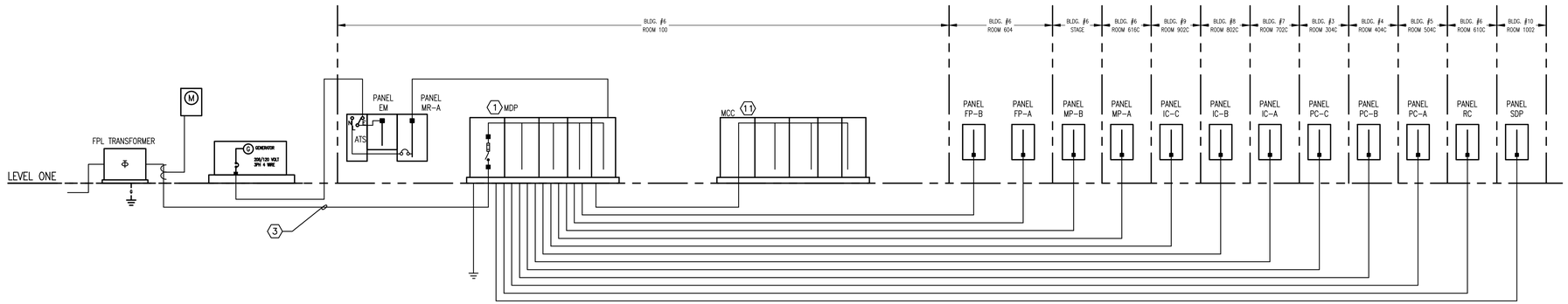

PARTIAL POWER RISER DIAGRAM - DEMOLITION

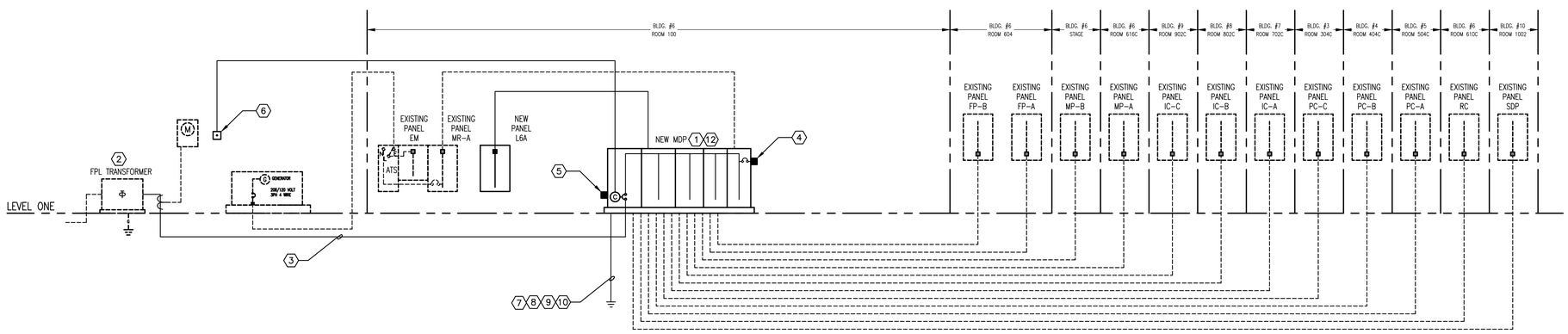

PARTIAL POWER RISER DIAGRAM - RENOVATION

GENERAL NOTES

1) REFER TO GENERAL NOTES FOR THIS DISCIPLINE.
2) REFER TO SPECIFICATIONS.
3) WHERE CONDUIT ROUTING IS SHOWN, THE CONDUITS ARE SHOWN FOR DIAGRAMMATIC PURPOSES AND ARE NOT NECESSARILY REPRESENTATIVE OF EXACT PLACEMENT.
4) REWORK/RELOCATE EXISTING ELECTRICAL AS REQUIRED TO FACILITATE CONSTRUCTION.
5) CONTRACTOR SHALL MAINTAIN CONTINUITY TO EXISTING DEVICES REMAINING.
6) ALL EXISTING ELECTRICAL IS NOT SHOWN.
7) VERIFY EXISTING PHASE ROTATIONS AT ALL EXISTING EQUIPMENT PRIOR TO DISCONNECTING ANY LOADS. VERIFY PHASE ROTATION HAS NOT CHANGED PRIOR TO REENERGIZING ANY LOADS.
8. ALL CONNECTIONS TO EXTERIOR ENCLOSURES MADE AT OTHER THAN BOTTOM OF ENCLOSURE SHALL BE MADE WITH WEATHERPROOF MYERS HUBS.

HEX NOTES

1. EXISTING MDP SHALL BE REPLACED WITH NEW.
2. COORDINATE ALL WORK WITH FLORIDA POWER AND LIGHT, PRIOR TO BID AND PROVIDE ALL ELECTRICAL REQUIRED.
3. EXISTING SERVICE ENTRANCE CONDUCTORS SHALL BE REPLACED WITH NEW. (7) SETS OF (3) 750 KCMIL, (1) #4/0 NEUTRAL IN 3.5" C.
4. SURGE SUPPRESSION UNIT. REFER TO SPECIFICATIONS.
5. LIGHTNING ARRESTOR ON LINE SIDE OF MAIN BREAKER. REFER TO SPECIFICATIONS.
6. SHUNT TRIP BUTTON FOR MAIN POWER SERVICE. LABEL "MAIN POWER SHUT-OFF - MDP"
7. #3/0 COPPER GROUND WIRE TO BUILDING STEEL.
8. #3/0 COPPER GROUND WIRE TO COLD WATER PIPE.
9. #3/0 COPPER GROUND WIRE TO BUILDING STEEL IN EXISTING BUILDING.
10. #3/0 COPPER GROUND WIRE TO (1) 5/8"X80'-0" COPPERWELD GROUND ROD.
11. REFEED ANY ACTIVE CIRCUITS IN MCC FROM NEW BREAKERS IN MDP. FIELD VERIFY AND PROVIDE BREAKERS AS REQUIRED. CIRCUITS COMING UP IN BOTTOM OF MCC SHALL BE RERUN OVERHEAD FROM LOAD BACK TO MDP. SOME OF THE STARTER UNITS ARE JUST PROVIDING POWER TO LOADS AND A CONTROL DEVICE IS PRESENT DOWNSTREAM OF THE STARTER. UP TO (3) OF THE STARTER UNITS MAY ALSO BE PROVIDING CONTROL OF LOAD. FIELD VERIFY AT START OF PROJECT AND PROVIDE NEW WALL MOUNTED STARTER/DISCONNECT WITH TIMEMARK PHASE/VOLTAGE MONITORING FOR CONTROL OF LOAD. INTERFACE NEW STARTER WITH EXISTING CONTROL DEVICES.
12. NEW SWITCHGEAR TO BE DIMENSIONALLY COMPATIBLE WITH EXISTING CONDUIT LOCATIONS FIELD CONDITIONS. COORDINATE PLACEMENT OF BREAKERS TO MINIMIZE NUMBER OF EXISTING FEEDERS THAT REQUIRE SPLICING. ANY CONDUCTORS THAT ARE NOT LONG ENOUGH TO REACH POSITION OF NEW TERMINATION SHALL BE EXTENDED USING LONG BARREL COMPRESSION SPLICES CRIMPED WITH MATCHING CIRCUMFERENTIAL DIE. SPLICE SHALL BE INSULATED WITH RAYCHEM HEAVY WALL HEAT SHRINK TUBING.

MATERN
Mechanical • Electrical • Plumbing • Fire Protection
Technology • Commissioning • Energy Engineers
130 Candace Drive
Maitland, FL 32751
ENG. BUS. No. EB-0005096 PHONE (407) 740-5020
CERT. OF AUTH. No. 5096 FAX (407) 740-0365

REVISIONS

NO.	DATE	DESCRIPTION
	02/07/23	BID ISSUE

HOLLY HILL SCHOOL
REPLACE SWITCHGEAR BLDG. 6
VCS Project No. 2347928
1500 CENTER AVE.
HOLLY HILL, FL 32117

ARCH/ENGR OF RECORD
Engineer
Adrian Baus

DESIGNED BY	DRAWN BY
AWB	MM/AWB
ISSUE DATE 12/09/2022	AE PROJECT NUMBER 2022-169

SHEET TITLE
PARTIAL POWER RISER DIAGRAMS

DRAWING NO.
E600

MATERN PROFESSIONAL ENGINEERING PLOT DATE: 2/9/2023 10:45:31 AM FILENAME:I:\2022_jobs\2022-169_VCS Holly Hill School - Replace Switchgear Bldg. 6 (2347928)\CAD\2022-169_E600.dwg CREATE DATE: 2/7/2023 3:23:19 PM LAST SAVED:2/7/2023 3:59:20 PM LAST SAVED BY: ABAUS

VOLTS L/N:	120
VOLTS PH.:	208
PHASE :	3
MOUNTING :	Surface
TYPE :	SB3
MFR :	SIEMENS

SWITCHBOARD : MDP (NEW)
MLO
MCB 3000
SH.TRIP YES
GFP YES
LOCATION: MECH RM 06-100

EXISTING : NO
NEMA 3R :
DRAWOUT SWBD :
FRONT ACCESS :

GENERAL NOTES:
(1) ALL C.B.'S FEEDING HVAC EQUIPMENT TO BE HACR TYPE.
(2) ALL C.B.'S FEEDING ELEV EQUIP TO BE SHUNT-TRIP TYPE.
(3) ALL C.B.'S FEEDING ELEV EQUIP TO BE SIZED AS REQ'D BY MFR.
(4) ALL C.B.'S FEEDING HID LTG TO BE HID RATED.
(5) NO MULTIWIRE BRANCH CKTS ARE ALLOWED
(6) NOT USED.
(7) SECTION I TO INCLUDE MCB/MLO AND METERS

<----------AIC RATING---------->

SERIES RATED		KA(*)
FULLY RATED	65	KA

(*) NOTE: MAY REQUIRE FULL RATING TO ACHIEVE

NOTES AND REFERENCE NOTES:
MFR = SIZE CB PER MFR. RECOMMENDATIONS.
$ = NEW CB IN EXIST SPACE
& = REPLACE EXIST CB WITH NEW
SH = SHUNT TRIP C.B.
AF = ARC FAULT CB
YES PROVIDE VOLTMETER/AMMETTER
YES SEE FLOOR PLAN FOR SECTION III CORNER

TOTAL AMPS A PH	2671	OPTIONAL CALC	NO		
TOTAL AMPS B PH	2671	CONNECTED LOAD	962	KVA	2671 AMPS
TOTAL AMPS C PH	2671	DEMAND	655	KVA	1818 AMPS
INFO CODE:		DIVERSITY	655	KVA	1818 AMPS
		TRANSFORMER SIZE		KVA	

SECTION II — WIDTH: 38 DEPTH: 38

LOAD DESCRIPTION	CONN	TYPE	AMPS	AMPS	AMPS	C.B. AMPS	C.B. POLE	REF NOTE	CKT. NO.	CKT. NO.	REF NOTE	C.B. POLE	C.B. AMPS	AMPS	AMPS	AMPS	LOAD DESCRIPTION	CONN	TYPE
SPACE							1		1	2									
---------						---------	---------		3	4									
---------						---------	---------		5	6									
SPACE							1		7	8									
---------						---------	---------		9	10									
---------						---------	---------		11	12									
PANEL: L6A		14.0				225	3		13	14		1					SPACE		
---------		14.0				---------	---------		15	16		---------	---------				---------		
---------		14.0				---------	---------		17	18		---------	---------				---------		
SPARE		0.2				150	3		19	20		3	125				SPARE		0.2
---------		0.2				---------	---------		21	22		---------	---------				---------		0.2
---------		0.2				---------	---------		23	24		---------	---------				---------		0.2
SPARE		0.2				175	3		25	26		3	200				SPARE		0.2
---------		0.2				---------	---------		27	28		---------	---------				---------		0.2
---------		0.2				---------	---------		29	30		---------	---------				---------		0.2
SPARE		0.2				400	3		31	32									
---------		0.2				---------	---------		33	34									
---------		0.2				---------	---------		35	36									
SPARE		0.2				400	3		37	38									
---------		0.2				---------	---------		39	40									
---------		0.2				---------	---------		41	42									
SPARE		0.2				600	3		43	44									
---------		0.2				---------	---------		45	46									
---------		0.2				---------	---------		47	48									
PANEL SPD	700	5.0	700			1000	3		49	50									
---------	700	5.0		700		---------	---------		51	52									
---------	700	5.0			700	---------	---------		53	54									
SPACE (400 AMP)							1		55	56									
---------						---------	---------		57	58									
---------						---------	---------		59	60									

SECTION IV — WIDTH: 32 DEPTH: 20

LOAD DESCRIPTION	CONN	TYPE	AMPS	AMPS	AMPS	C.B. AMPS	C.B. POLE	REF NOTE	CKT. NO.	CKT. NO.	REF NOTE	C.B. POLE	C.B. AMPS	AMPS	AMPS	AMPS	LOAD DESCRIPTION	CONN	TYPE
SPACE							1		61	62									
---------						---------	---------		63	64									
---------						---------	---------		65	66									
SPACE							1		67	68									
---------						---------	---------		69	70									
---------						---------	---------		71	72									
SPACE							1		73	74									
---------						---------	---------		75	76									
---------						---------	---------		77	78									
SPACE							1		79	80									
---------						---------	---------		81	82									
---------						---------	---------		83	84									
PANEL PC-A (BUILDING 5)	125	5.0	125			175	3		85	86		3	175	125			PANEL IC-A (BUILDING 7)	125	5.0
---------	125	5.0		125		---------	---------		87	88		---------	---------		125		---------	125	5.0
---------	125	5.0			125	---------	---------		89	90		---------	---------			125	---------	125	5.0
PANEL PC-B (BUILDING 4)	125	5.0	125			175	3		91	92		3	175	125			PANEL IC-C (BUILDING 9)	125	5.0
---------	125	5.0		125		---------	---------		93	94		---------	---------		125		---------	125	5.0
---------	125	5.0			125	---------	---------		95	96		---------	---------			125	---------	125	5.0
PANEL PC-C (BUILDING 3)	125	5.0	125			175	3		97	98		1					SPACE (5")		
---------	125	5.0		125		---------	---------		99	100		---------	---------				---------		
---------	125	5.0			125	---------	---------		101	102		---------	---------				---------		
SPACE (5")							1		103	104		3	175	125			PANEL IC-B (BUILDING 8)	125	5.0
---------						---------	---------		105	106		---------	---------		125		---------	125	5.0
---------						---------	---------		107	108		---------	---------			125	---------	125	5.0
SPACE (3.75")							1		109	110									
---------						---------	---------		111	112									
---------						---------	---------		113	114									

SECTION V — WIDTH: 38 DEPTH: 20

LOAD DESCRIPTION	CONN	TYPE	AMPS	AMPS	AMPS	C.B. AMPS	C.B. POLE	REF NOTE	CKT. NO.	CKT. NO.	REF NOTE	C.B. POLE	C.B. AMPS	AMPS	AMPS	AMPS	LOAD DESCRIPTION	CONN	TYPE
SPACE							1		121	122		1					SPACE		
---------						---------	---------		123	124		---------	---------				---------		
---------						---------	---------		125	126		---------	---------				---------		
SPACE							1		127	128		1					SPACE		
---------						---------	---------		129	130		---------	---------				---------		
---------						---------	---------		131	132		---------	---------				---------		
SPACE							1		133	134		1					SPACE		
---------						---------	---------		135	136		---------	---------				---------		
---------						---------	---------		137	138		---------	---------				---------		
SPACE							1		139	140		1					SPACE		
---------						---------	---------		141	142		---------	---------				---------		
---------						---------	---------		143	144		---------	---------				---------		
SPACE							1		145	146		3	200	150			PANEL MP-A (BUILDING 6 - ART ROOM)	150	5.0
---------						---------	---------		147	148		---------	---------		150		---------	150	5.0
---------						---------	---------		149	150		---------	---------			150	---------	150	5.0
SPACE							1		151	152		3	150	100			PANEL MP-B (BUILDING 6 - STAGE)	100	5.0
---------						---------	---------		153	154		---------	---------		100		---------	100	5.0
---------						---------	---------		155	156		---------	---------			100	---------	100	5.0
SPACE							1		157	158		3	150	100			PANEL FP-A (BUILDING 6 - KITCHEN)	100	5.0
---------						---------	---------		159	160		---------	---------		100		---------	100	5.0
---------						---------	---------		161	162		---------	---------			100	---------	100	5.0
SPACE							1		163	164		3	175	100			PANEL FP-B (BUILDING 6 - KITCHEN)	100	5.0
---------						---------	---------		165	166		---------	---------		100		---------	100	5.0
---------						---------	---------		167	168		---------	---------			100	---------	100	5.0
PANEL RC (PORTABLES)	300	5.0	300			500	3		169	170									
---------	300	5.0		300		---------	---------		171	172									
---------	300	5.0			300	---------	---------		173	174									
SPACE							1		175	176									
---------						---------	---------		177	178									
---------						---------	---------		179	180									

SECTION VI — WIDTH: 32 DEPTH: 20

LOAD DESCRIPTION	CONN	TYPE	AMPS	AMPS	AMPS	C.B. AMPS	C.B. POLE	REF NOTE	CKT. NO.	CKT. NO.	REF NOTE	C.B. POLE	C.B. AMPS	AMPS	AMPS	AMPS	LOAD DESCRIPTION	CONN	TYPE
SPACE							1		1	2	MFR	3	30				SPD		18.0
---------						---------	---------		3	4		---------	---------				---------		18.0
---------						---------	---------		5	6		---------	---------				---------		18.0
SPACE							1		7	8		1					SPACE		
---------						---------	---------		9	10		---------	---------				---------		
---------						---------	---------		11	12		---------	---------				---------		
SPACE							1		13	14		1					SPACE		
---------						---------	---------		15	16		---------	---------				---------		
---------						---------	---------		17	18		---------	---------				---------		
PUMP 4 (VFD)	92	8.0	92			125	3		19	20		3	125	92			PUMP 3 (VFD)	92	8.0
---------	92	8.0		92		---------	---------		21	22		---------	---------		92		---------	92	8.0
---------	92	8.0			92	---------	---------		23	24		---------	---------			92	---------	92	8.0
SPACE							1		25	26		1					SPACE		
---------						---------	---------		27	28		---------	---------				---------		
---------						---------	---------		29	30		---------	---------				---------		
SPARE		0.2				30	3		31	32		3	30				SPARE		0.2
---------		0.2				---------	---------		33	34		---------	---------				---------		0.2
---------		0.2				---------	---------		35	36		---------	---------				---------		0.2
AJU-6-1	62	5.0	62			100	3		37	38		3	45	25			AHU-6-2	25	5.0
---------	62	5.0		62		---------	---------		39	40		---------	---------		25		---------	25	5.0
---------	62	5.0			62	---------	---------		41	42		---------	---------			25	---------	25	5.0
SPACE							1		43	44		3	200	150			PANEL MR-A	150	5.0
---------						---------	---------		45	46		---------	---------		150		---------	150	5.0
---------						---------	---------		47	48		---------	---------			150	---------	150	5.0
PUMP HWP-1	25	8.0	25			45	3		49	50		3	45	25			PUMP HWP-2	25	8.0
---------	25	8.0		25		---------	---------		51	52		---------	---------		25		---------	25	8.0
---------	25	8.0			25	---------	---------		53	54		---------	---------			25	---------	25	8.0
SPACE (3.75")							1		55	56		1					SPACE (3.75")		
---------						---------	---------		57	58		---------	---------				---------		
---------						---------	---------		59	60		---------	---------				---------		

COPYRIGHT ME, LLC 06/01/03

VERSION: C11e8 REVISED: 09/09/21

WIDTH: DEPTH:

SECTION I - MAINS	
VOLTS L/N:	120
VOLTS PH.:	208
PHASE :	3
MOUNTING :	Surface
TYPE :	
MFR :	GOULD - ITE

SWITCHBOARD : MDP (EXIST)
MLO
MCB 3000
SH.TRIP
GFP
LOCATION:

EXISTING : YES
NEMA 3R :
DRAWOUT SWBD :
FRONT ACCESS :

GENERAL NOTES:
(1) ALL C.B.'S FEEDING HVAC EQUIPMENT TO BE HACR TYPE.
(2) ALL C.B.'S FEEDING ELEV EQUIP TO BE SHUNT-TRIP TYPE.
(3) ALL C.B.'S FEEDING ELEV EQUIP TO BE SIZED AS REQ'D BY MFR.
(4) ALL C.B.'S FEEDING HID LTG TO BE HID RATED.
(5) NO MULTIWIRE BRANCH CKTS ARE ALLOWED
(6) NOT USED.
(7) SECTION I TO INCLUDE MCB/MLO AND METERS

<----------AIC RATING---------->

SERIES RATED		KA(*)
FULLY RATED	65	KA

(*) NOTE: MAY REQUIRE FULL RATING TO ACHIEVE

NOTES AND REFERENCE NOTES:
MFR = SIZE CB PER MFR. RECOMMENDATIONS.
$ = NEW CB IN EXIST SPACE
& = REPLACE EXIST CB WITH NEW
SH = SHUNT TRIP C.B.
AF = ARC FAULT CB
G1 GFCI CB
YES SEE FLOOR PLAN FOR SECTION III CORNER

TOTAL AMPS A PH	2771	OPTIONAL CALC	NO		
TOTAL AMPS B PH	2771	CONNECTED LOAD	998	KVA	2771 AMPS
TOTAL AMPS C PH	2771	DEMAND	678	KVA	1883 AMPS
INFO CODE:		DIVERSITY	678	KVA	1883 AMPS
		TRANSFORMER SIZE		KVA	

SECTION II — WIDTH: 38 DEPTH: 38

LOAD DESCRIPTION	CONN	TYPE	AMPS	AMPS	AMPS	C.B. AMPS	C.B. POLE	REF NOTE	CKT. NO.	CKT. NO.	REF NOTE	C.B. POLE	C.B. AMPS	AMPS	AMPS	AMPS	LOAD DESCRIPTION	CONN	TYPE
MCC-C	100	5.0	100			500	3		1	2									
---------	100	5.0		100		---------	---------		3	4									
---------	100	5.0			100	---------	---------		5	6									
PANEL SPD	700	5.0	700			1000	3		7	8									
---------	700	5.0		700		---------	---------		9	10									
---------	700	5.0			700	---------	---------		11	12									

SECTION IV — WIDTH: 32 DEPTH: 20

LOAD DESCRIPTION	CONN	TYPE	AMPS	AMPS	AMPS	C.B. AMPS	C.B. POLE	REF NOTE	CKT. NO.	CKT. NO.	REF NOTE	C.B. POLE	C.B. AMPS	AMPS	AMPS	AMPS	LOAD DESCRIPTION	CONN	TYPE
PANEL PC-A (BUILDING 5)	125	5.0	125			175	3		61	62									
---------	125	5.0		125		---------	---------		63	64									
---------	125	5.0			125	---------	---------		65	66									
PANEL PC-B (BUILDING 4)	125	5.0	125			175	3		67	68									
---------	125	5.0		125		---------	---------		69	70									
---------	125	5.0			125	---------	---------		71	72									
PANEL PC-C (BUILDING 3)	125	5.0	125			175	3		73	74									
---------	125	5.0		125		---------	---------		75	76									
---------	125	5.0			125	---------	---------		77	78									
PANEL IC-A (BUILDING 7)	125	5.0	125			175	3		79	80									
---------	125	5.0		125		---------	---------		81	82									
---------	125	5.0			125	---------	---------		83	84									
PANEL IC-C (BUILDING 9)	125	5.0	125			175	3		85	86									
---------	125	5.0		125		---------	---------		87	88									
---------	125	5.0			125	---------	---------		89	90									
PANEL IC-B (BUILDING 8)	125	5.0	125			175	3		91	92									
---------	125	5.0		125		---------	---------		93	94									
---------	125	5.0			125	---------	---------		95	96									
SPACE							1		97	98									
---------						---------	---------		99	100									
---------						---------	---------		101	102									
PANEL MP-A (BUILDING 6 - ART ROOM)	150	5.0	150			200	3		121	122									
---------	150	5.0		150		---------	---------		123	124									
---------	150	5.0			150	---------	---------		125	126									
PANEL MP-B (BUILDING 6 - STAGE)	100	5.0	100			150	3		127	128									
---------	100	5.0		100		---------	---------		129	130									
---------	100	5.0			100	---------	---------		131	132									
PANEL FP-A (BUILDING 6 - KITCHEN)	100	5.0	100			150	3		133	134									
---------	100	5.0		100		---------	---------		135	136									
---------	100	5.0			100	---------	---------		137	138									
PANEL FP-B (BUILDING 6 - KITCHEN)	100	5.0	100			175	3		139	140									
---------	100	5.0		100		---------	---------		141	142									
---------	100	5.0			100	---------	---------		143	144									
PANEL RC (PORTABLES)	300	5.0	300			500	3		145	146									
---------	300	5.0		300		---------	---------		147	148									
---------	300	5.0			300	---------	---------		149	150									
SPACE							1		151	152									
---------						---------	---------		153	154									
---------						---------	---------		155	156									

SECTION VI — WIDTH: 32 DEPTH: 20

LOAD DESCRIPTION	CONN	TYPE	AMPS	AMPS	AMPS	C.B. AMPS	C.B. POLE	REF NOTE	CKT. NO.	CKT. NO.	REF NOTE	C.B. POLE	C.B. AMPS	AMPS	AMPS	AMPS	LOAD DESCRIPTION	CONN	TYPE
SPACE							1		1	2		1					SPACE		
---------						---------	---------		3	4		---------	---------				---------		
---------						---------	---------		5	6		---------	---------				---------		
SPACE							1		7	8		1					SPACE		
---------						---------	---------		9	10		---------	---------				---------		
---------						---------	---------		11	12		---------	---------				---------		
SPACE							1		13	14		1					SPACE		
---------						---------	---------		15	16		---------	---------				---------		
---------						---------	---------		17	18		---------	---------				---------		
PUMP 4 (VFD)	92	8.0	92			125	3		19	20		3	125	92			PUMP 3 (VFD)	92	8.0
---------	92	8.0		92		---------	---------		21	22		---------	---------		92		---------	92	8.0
---------	92	8.0			92	---------	---------		23	24		---------	---------			92	---------	92	8.0
SPARE		0.2				100	3		25	26		3	100				SPARE		0.2
---------		0.2				---------	---------		27	28		---------	---------				---------		0.2
---------		0.2				---------	---------		29	30		---------	---------				---------		0.2
SPARE		0.2				30	3		31	32		3	30				SPARE		0.2
---------		0.2				---------	---------		33	34		---------	---------				---------		0.2
---------		0.2				---------	---------		35	36		---------	---------				---------		0.2
AJU-6-1	62	5.0	62			100	3		37	38		3	45	25			AHU-6-2	25	5.0
---------	62	5.0		62		---------	---------		39	40		---------	---------		25		---------	25	5.0
---------	62	5.0			62	---------	---------		41	42		---------	---------			25	---------	25	5.0
PANEL MR-A	150	5.0	150			200	3		43	44									
---------	150	5.0		150		---------	---------		45	46									
---------	150	5.0			150	---------	---------		47	48									
PUMP HWP-1	25	8.0	25			45	3		49	50		3	45	25			PUMP HWP-2	25	8.0
---------	25	8.0		25		---------	---------		51	52		---------	---------		25		---------	25	8.0
---------	25	8.0			25	---------	---------		53	54		---------	---------			25	---------	25	8.0

TYPE WRITTEN PANEL DIRECTORIES SHALL BE PROVIDED FOR EACH PANEL AS REQUIRED BY THE 2014 NEC. DIRECTORIES SHALL IDENTIFY LOAD AND THE ROOM(S) WHERE LOADS ARE LOCATED IN SUFFICIENT DETAIL TO ALLOW EACH CIRCUIT TO BE DISTINGUISHED FROM ALL OTHERS. ROOM NUMBERS SHALL BE ACTUAL ROOM NUMBERS USED FOR ROOM SIGNAGE.

SCHEDULE KEY	
MDP (NEW)	MDP (EXIST)

MATERN
Mechanical • Electrical • Plumbing • Fire Protection
Technology • Commissioning • Energy Engineers
130 Candace Drive
Maitland, FL 32751
ENG. BUS. No. EB-0005096 PHONE (407) 740-5020
CERT. OF AUTH. No. 5096 FAX (407) 740-0365

REVISIONS
DOCUMENT HISTORY

NO.	DATE	DESCRIPTION
	02/07/23	BID ISSUE

HOLLY HILL SCHOOL
REPLACE SWITCHGEAR BLDG. 6
VCS Project No. 2347928
1500 CENTER AVE.
HOLLY HILL, FL 32117

ARCH/ENGR OF RECORD
Engineer
Adrian Baus

DESIGNED BY AWB	DRAWN BY MM/AWB
ISSUE DATE 12/09/2022	AE PROJECT NUMBER 2022-169

SHEET TITLE
SCHEDULES

DRAWING NO.
E601

MATERN PROFESSIONAL ENGINEERING PLOT DATE: 2/9/2023 10:45:38 AM FILENAME:I:\2022_jobs\2022-169_VCS Holly Hill School - Replace Switchgear Bldg. 6 (2347928)\CAD\2022-169_E601.dwg CREATE DATE: 1/9/2023 6:24:06 PM LAST SAVED:2/7/2023 3:35:40 PM LAST SAVED BY: ABAUS

COPYRIGHT ME, LLC 06/01/03

VERSION: C11e8 REVISED: 09/09/21

VOLTS L/N:	120
VOLTS PH.:	208
PHASE :	3
MOUNTING :	Surface
TYPE :	NQ-
MFR :	SQ D

PANEL : L6A

MLO(***)	225	LOCATI0N: MECH RM 06-100
MCB		
SH.TRIP		

EXISTING : NO
SECTIONS : 1
NEMA 3R :

GENERAL NOTES:
(1) ALL C.B.'S FEEDING HVAC EQUIPMENT TO BE HACR TYPE.
(2) ALL C.B.'S FEEDING ELEV EQUIP TO BE SHUNT-TRIP TYPE.
(3) ALL C.B.'S FEEDING ELEV EQUIP TO BE SIZED AS REQ'D BY MFR.
(4) ALL C.B.'S FEEDING HID LTG TO BE HID RATED.
(5) NO MULTIWIRE BRANCH CKTS ARE ALLOWED
(6) NOT USED.

<----------AIC RATING---------->

SERIES RATED		KA(*)
FULLY RATED	65	KA

(*) NOTE: MAY REQUIRE FULL RATING TO ACHIEVE

NOTES AND REFERENCE NOTES:
MFR = SIZE CB PER MFR. RECOMMENDATIONS.
$ = NEW CB IN EXIST SPACE
& = REPLACE EXIST CB WITH NEW
SH = SHUNT TRIP C.B.
AF = ARC FAULT CB
G1 GFCI CB
G2 GFPE CB

TOTAL AMPS A PH
TOTAL AMPS B PH
TOTAL AMPS C PH
INFO CODE:

(***) NOTE: SIZE SHOWN IS MINIMUM ACCEPTABLE MLO AMPERAGE. INCREASE SIZE IF REQUIRED TO ACHIEVE QUANTITY OF POLES OR BREAKER SIZE/AIC RATING AS CALLED FOR IN SCHEDULE.

OPTIONAL CALC	NO		
CONNECTED LOAD		KVA	AMPS
DEMAND		KVA	AMPS
DIVERSITY		KVA	AMPS
TRANSFORMER SIZE		KVA	

SECTION 1 WITH MAINS — WIDTH: 20 DEPTH: 6.00

LOAD DESCRIPTION	CONN	TYPE	AMPS	AMPS	AMPS	C.B. AMPS	C.B. POLE	REF NOTE	CKT. NO.	CKT. NO.	REF NOTE	C.B. POLE	C.B. AMPS	AMPS	AMPS	AMPS	LOAD DESCRIPTION	CONN	TYPE
SPARE		0.2				20	1		1	2		1	20				SPARE		0.2
SPARE		0.2				20	1		3	4		1	20				SPARE		0.2
SPARE		0.2				20	1		5	6		1	20				SPARE		0.2
SPARE		0.2				20	1		7	8		1	20				SPARE		0.2
SPARE		0.2				20	1		9	10		1	20				SPARE		0.2
SPARE		0.2				20	1		11	12		1	20				SPARE		0.2
SPARE		0.2				20	1		13	14		1	20				SPARE		0.2
SPARE		0.2				20	1		15	16		1	20				SPARE		0.2
SPARE		0.2				20	1		17	18		1	20				SPARE		0.2
SPARE		0.2				20	1		19	20		1	20				SPARE		0.2
SPARE		0.2				20	1		21	22		1	20				SPARE		0.2
SPARE		0.2				20	1		23	24		1	20				SPARE		0.2
SPARE		0.2				20	1		25	26		1	20				SPARE		0.2
SPARE		0.2				20	1		27	28		1	20				SPARE		0.2
SPARE		0.2				20	1		29	30		1	20				SPARE		0.2
SPACE							1		31	32		1					SPACE		
SPACE							1		33	34		1					SPACE		
SPACE							1		35	36		1					SPACE		
SPACE							1		37	38		1					SPACE		
SPACE							1		39	40		1					SPACE		
SPACE							1		41	42		1					SPACE		
SPACE							1		43	44		1					SPACE		
SPACE							1		45	46		1					SPACE		
SPACE							1		47	48		1					SPACE		
SPACE							1		49	50		1					SPACE		
SPACE							1		51	52		1					SPACE		
SPACE							1		53	54		1					SPACE		
SPACE							1		55	56	MFR	3	30				SPD		18.0
SPACE							1		57	58		--------	--------				--------		18.0
SPACE							1		59	60		--------	--------				--------		18.0
SUBFEED LUGS/BREAKER																	SUBFEED LUGS/BREAKER		
									S.F.	S.F.									
----------						--------	--------		S.F.	S.F.		--------	--------				----------		
----------						--------	--------		S.F.	S.F.		--------	--------				----------		

TYPE WRITTEN PANEL DIRECTORIES SHALL BE PROVIDED FOR EACH PANEL AS REQUIRED BY THE 2014 NEC. DIRECTORIES SHALL IDENTIFY LOAD AND THE ROOM(S) WHERE LOADS ARE LOCATED IN SUFFICIENT DETAIL TO ALLOW EACH CIRCUIT TO BE DISTINGUISHED FROM ALL OTHERS. ROOM NUMBERS SHALL BE ACTUAL ROOM NUMBERS USED FOR ROOM SIGNAGE.

SCHEDULE KEY
L6A (NEW)

MATERN
Mechanical • Electrical • Plumbing • Fire Protection
Technology • Commissioning • Energy Engineers
130 Candace Drive
Maitland, FL 32751
ENG. BUS. No. EB-0005096 PHONE (407) 740-5020
CERT. OF AUTH. No. 5096 FAX (407) 740-0365

REVISIONS
DOCUMENT HISTORY

NO.	DATE	DESCRIPTION
	02/07/23	BID ISSUE

HOLLY HILL SCHOOL
REPLACE SWITCHGEAR BLDG. 6
VCS Project No. 2347928
1500 CENTER AVE.
HOLLY HILL, FL 32117

ARCH/ENGR OF RECORD
Engineer
Adrian Baus

DESIGNED BY: AWB	DRAWN BY: MM/AWB
ISSUE DATE: 12/09/2022	AE PROJECT NUMBER: 2022-169

SHEET TITLE
SCHEDULES

DRAWING NO.
E602

MATERN PROFESSIONAL ENGINEERING PLOT DATE: 2/9/2023 10:45:46 AM FILENAME:I:\2022_jobs\2022-169_VCS Holly Hill School - Replace Switchgear Bldg. 6 (2347928)\CAD\2022-169_E602.dwg
CREATE DATE: 1/9/2023 6:24:19 PM LAST SAVED:2/7/2023 3:36:10 PM LAST SAVED BY: ABAUS